PRODUCT PORTFOLIO

Cavaletti

Cavaletti®

PROFESSIONAL SEATING

Cavaletti Vélo

Cavaletti Vélo

Dynamism, agility and speed are essential in the contemporary corporate environment. For him, Cavaletti created the Vélo Line, a product inspired by the concepts of flexibility and lightness to offer ergonomics and dynamic comfort for all types of use. A global project, with original design, Made in Brazil.

Cavaletti partner since 2011, Marc Sapetti was born in Andorra and graduated in industrial design in Barcelona. In the following years he worked in relevant offices in Europe, culminating recently with the creation of his own office. Today, Sapetti Design Consultancy is a multi-award winning studio, including IF Awards (Cavaletti Go) and Good Design Award (Cavaletti Idea). For Marc, “Design is not just a product, but the sum of different factors such as engineering, communication, design and ergonomics”.

CHARACTERISTICS

HEADREST
With generous dimensions, it offers greater support for the cervical region. Contact area with Soft Touch PU foam coating.

BACKREST
High backrest on all versions. Adjustable lumbar support (operating models). Available in Light Gray and Carbon colors. Padded cover option in Polyester, Blend, Politex, CEC-Stilo or Natural Leather.

MECHANISM
4-stage Syncron mechanism with front maniple tension adjustment or SRE MC Mechanism, both with adjustment of seat depth. Rotating platforme option for Meeting Rooms (SR).

MESH
High-strength intelligent membrane that adapts to column curvature providing constant support and ventilation. Available in eight unique colors.

SEAT
Seat in injected foam, with depth adjustment (operating models). Gas Height Adjustment. Coatings available in Polyester, Politex, Blend, Grid, Haven, Space, CEC-Stilo, Vinyl and Natural Leather.

ARMREST
ID armrest (adjustable in height and lateral spacing, with option of coating the armrest in leather) and 3D (adjustable in height, advance and angle of the PU support).

BASES
Base options in Aluminum or Nylon, with 65mm castors in Nylon or PU.

STRUCTURES
Fixed structures with castors or shoes, with or without Integrated armrest (SI). Painting in Silver or Universal Black.

CONFIGURATIONS

42.101 AC
Swivel Chair
Syncron RP
ID Armrest
Aluminium Base
Lumbar Support
Headrest
Padded Cover

42.101 AC
Swivel Chair
Syncron RP
ID Armrest
Nylon Base
Lumbar Support
Headrest

42.101
Swivel Chair
Syncron RP
ID Armrest
Lumbar Support
Nylon Base

42.101 SR
Swivel Chair
Rotating Platforme
Nylon Base

42.106 ROD
Visitor Chair
P Structure
Integrated Armrest

42.106 SI
Visitor Chair
SI Structure
Integrated Armrest

MESH

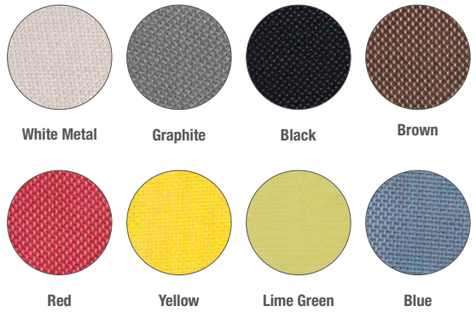

PLASTIC SURFACES

Light Gray

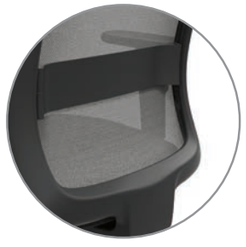

Carbon

Cavaletti®

TECHNICAL DRAWINGS

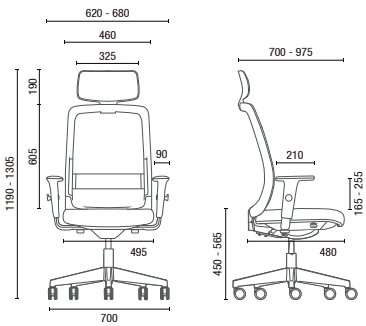

42.101 AC **Swivel Chair**

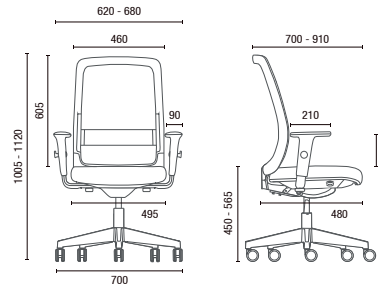

42.101 **Swivel Chair**

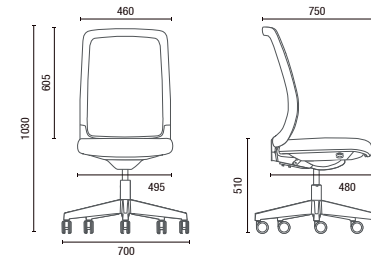

42.101 SR **Swivel Chair**

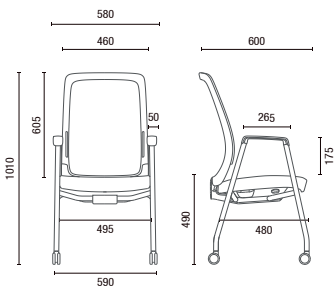

42.106 ROD **Visitor Chair**

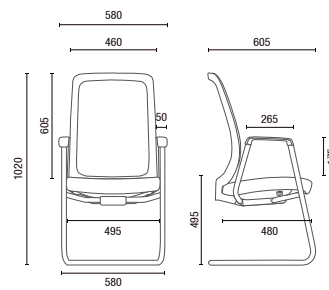

42.106 SI **Visitor Chair**

NOTE: Extreme measurements obtained without using a load gauge.

Cavaletti S/A Professional Seating
Street Dr. Hiram Sampaio, 550
Erechim/RS Brasil 99.706-461
Fone/Fax: (54) 3520.4100
atendimento@cavaletti.com.br
www.cavaletti.com.br

6 YEARS of WARRANTY Cavaletti

ABNT-ISO9001 | ABNT-ISO14001 | ABNT-ISO45001 | NBR13962 | NR17

QUALIDADE-ABNT-AMBIENTAL PE-165

*Certified Products with Ecological Label (Quality - ABNT - Environmental) or ABNT NBR 13962 Standard, under consultation with the Commercial Department - Public Sector.

©Copyright 2021 Cavaletti S/A - All rights reserved. Cavaletti S/A reserves the right to change products at any time and without prior notice. Some items are optional and may not be part of the base product.JUN/2021 V2.

Cavaletti®

PROFESSIONAL SEATING

Cavaletti Idea

Cavaletti Idea

New ideas for new times. Cavaletti Idea seeks to make design and ergonomic high quality accessible for all types of offices. A product made in Brazil, with a high standard of quality and inspired in contemporary concepts of collaborative work.

CHARACTERISTICS

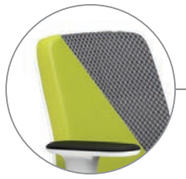

COATINGS
Backrest with flexible internal structure and two options for finish: Soft (in Haven, Polyester, Politex, Blend, Grid, Space, CEC - Stilo, Vinyl and Natural Leather options) or Mesh (in Space option).

MECHANISM
4-stage Syncron mechanism with tension adjustment by front handle or SRE MC mechanism, both with seat depth adjustment. Turntable option for Meeting Rooms (SR).

COLORS
Three color options for the main plastic surfaces: Off White, Light Gray or Carbon.

ARMS
ID arms (adjustable in height and lateral spacing, with option of leather armrest lining), 3D (adjustable in PU support height, feed and angle) and 4D CA (adjustable in height, lateral distance, feed and angle of PU support).

BACKREST
Backrest height adjustable, with drive by trigger.

SEAT
Injected foam seat, Depth Adjustment and Gas Height Adjustment. Coatings available in Polyester, Politex, Blend, Grid, Space, Haven, CEC - Stilo, Vinyl and Natural Leather.

BASES
Base options in Aluminum or Nylon, with 65mm castors in Nylon or PU.

STRUCTURES
Fixed structure Swing with Integrated Arms (SI) and Painting in Silver or Universal Black.

CONFIGURATIONS

IDEA SOFT

40.101
Highback Swivel
Syncron RP
ID Arms
Aluminum Base

40.102
Midback Swivel
Syncron RP
ID Arms
Aluminum Base

40.106 SI
Visitor
SI Structure
Integrated Arms

IDEA MESH

40.202
Midback Swivel
Syncron RP
ID Arms
Nylon Base

40.202 SR
Midback
Swivel Plataform
Nylon Base

40.206 SI
Visitor
SI Structure
Integrated Arms

COLORS
Three shade options for plastic surfaces.

Off White

Light Gray

Carbon

Cavaletti®

TECHNICAL DRAWINGS

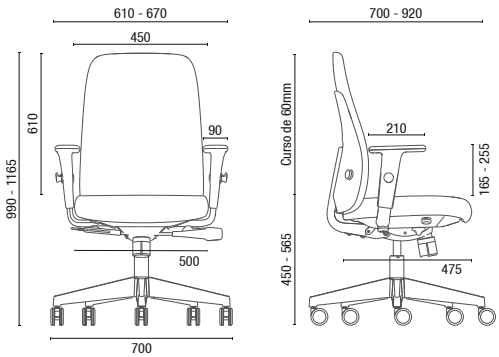

40.101 **Highback Swivel**

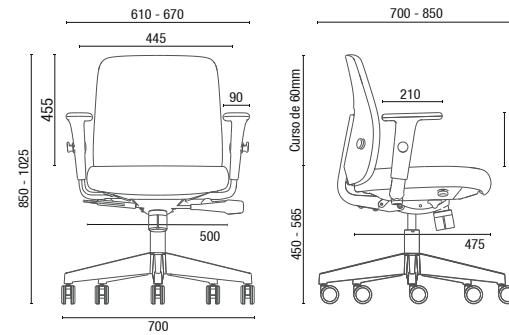

40.102 / 40.202 **Midback Swivel**

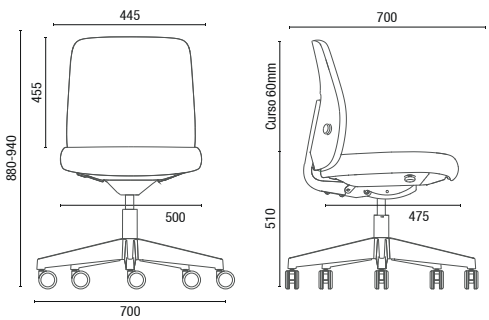

40.202 SR **Midback Swivel**

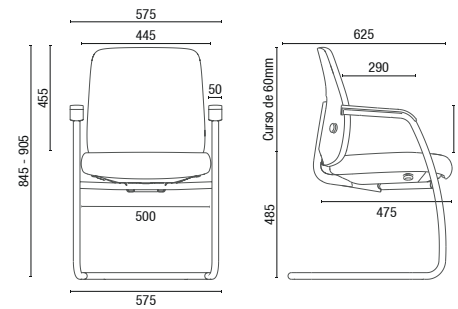

40.106 SI / 40.206 SI **Visitor**

NOTE: Extreme measurements obtained without using a load gauge.

Cavaletti S/A Professional Seating
Street Dr. Hiram Sampaio, 550
Erechim/RS Brasil 99.706-461
Fone/Fax: (54) 3520.4100
atendimento@cavaletti.com.br
www.cavaletti.com.br

6 YEARS of WARRANTY Cavaletti

ABNT-ISO9001 ABNT-ISO14001 ABNT-ISO45001 NBR13962 NR17

*Certified Products with Ecological Label (Quality - ABNT - Environmental) or ABNT NBR 13962 Standard, under consultation with the Commercial Department - Public Sector.

©Copyright 2021 Cavaletti S/A - All rights reserved. Cavaletti S/A reserves the right to change products at any time and without prior notice. Some items are optional and may not be part of the base product.JUN/2021 V2.

Cavaletti®

PROFESSIONAL SEATING

Cavaletti Moov

Cavaletti Moov

Cavaletti Moov is a multitask chair, ideal for dynamic environments. From the corporate office to coworking, there is always a version to meet the needs of the projects.

CHARACTERISTICS

BACKRESTS

Three backrest options: mesh, engineering polymer and engineering polymer with dust jacket.

COATED BACKREST

Back cover with two seam options: Smooth and diamond.

STRUCTURE

Engineering polymer frame available in Gray and Black according to configuration.

ARMRESTS

Fixed: TC arm.
Adjustable: SL and MC arm. All the models are available in colors Black and Gray.

BASES

Bases Up (with 65mm Casters in Nylon or PU) and Steel with Cover (with 50mm Casters in Nylon or PU), available in Black and Grey.

MECHANISM

Syncron type Mechanism, with starting position lock or relax free and automatic tension regulation, adjusting to the user's weight without need for manual adjustment.

NOTE: Product in this image with Dark Gray 404 Politex.

DESIGN IN MOTION

The Moov is a versatile chair that features three back options: mesh, polymer engineering and polymer engineering with upholstered jacket. This diversity allows the model to be adapted to the needs of each activity.

NOTE: Products in this image with Blue 303 Mesh and Gray Metal 402 Politex; Haven Concrete 562 and Haven Sand 560; Haven Field 556; Yellow 258 Polyester; White Metal 307 Mesh and Polyester Tangerine 172; Haven Terracotta 552; Graphite 308 Mesh; Haven Land 561.

CUSTOMIZE AT WILL

Light and flexible in configurations makes it easy to specify for both fast use environments and heavy use for operating environments. The two structure color options, the six coating options and the eight mesh color options allow Cavaletti Moov to complement the project's moodboard, from the more formal to the more laid-back.

NOTE: Products in this image with Haven Field 556; Terracotta 552; Earth 561; Sand 560 and Haven Field 556.

COATING

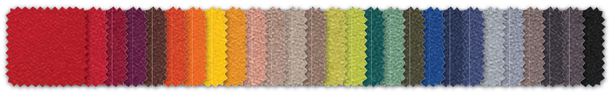

POLYESTER
27 colors

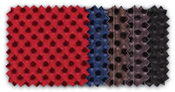

SPACE
05 colors

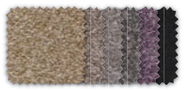

POLITEX
06 colors

VINYL
12 colors

CEC - STILO
10 colors

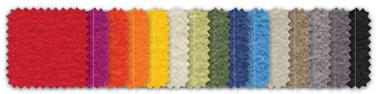

HAVEN
15 colors

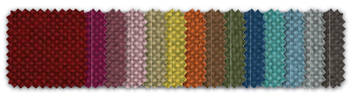

GRID
14 colors

CONFIGURATIONS

Check below some possible combinations for Cavaletti Moov and choose yours.

17.101
Swivel
Syncron
Mesh Back
Black Structure
MC Armrests
Base Up

17.201
Swivel
Syncron
Backrest in engineering polymer
Black Structure
MC Armrests
Base Up

17.301
Swivel
Syncron
Backrest in engineering polymer with dust jacket
Black Structure
MC Armrests
Base Up

17.101
Swivel
Syncron
Mesh Back
Gray Structure
MC Armrests
Base Up

17.201
Swivel
Syncron
Backrest in engineering polymer
Gray Structure
MC Armrests
Base Up

17.301
Swivel
Syncron
Backrest in engineering polymer with dust jacket
Gray Structure
MC Armrests
Base Up

NOTE: Products in this image with Graphite 308 Mesh and Gray Metal 402 Politex.

STRUCTURES

Black

Gray

SEAM

Diamond

Smooth

MESH

White Metal

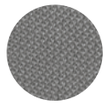

Graphite

Black

Red

Yellow

Lime Green

Brown

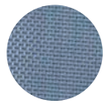

Blue

Cavaletti®

TECHNICAL DRAWINGS

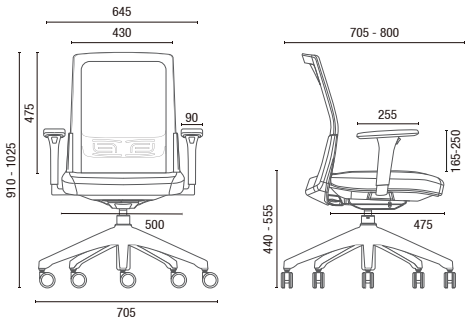

17.101 **Swivel - MC Arm and Base Up**

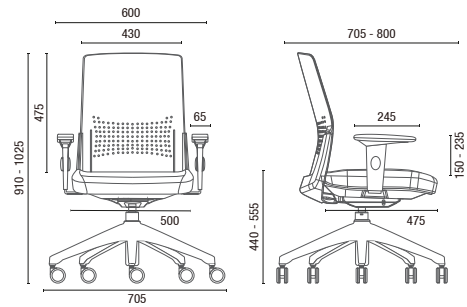

17.201 **Swivel - SL Arm and Base Up**

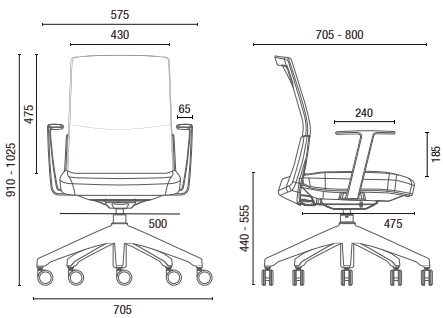

17.301 **Swivel - TC Arm and Base Up**

NOTE: Cover products with White Metal 307 mesh and Haven sky 559, Haven Terracotta 552; Haven Sand 560.

NOTE: Extreme measurements obtained without using a load gauge.

Cavaletti S/A Professional Seating
Street Dr. Hiram Sampaio, 550
Erechim/RS Brasil 99.706-461
Fone/Fax: (54) 3520.4100
atendimento@cavaletti.com.br
www.cavaletti.com.br

Look for FSC® certified products

The mark of responsible forestry

ABNT-ISO9001 ABNT-ISO14001 ABNT-ISO45001 NR17

R4DESIGN

©Copyright 2021 Cavaletti S/A - All rights reserved. Cavaletti S/A reserves the right to change products at any time and without prior notice. Some items are optional and may not be part of the base product.JUN/2021 V2.

Cavaletti®
PROFESSIONAL SEATING
05
COFFEE
03
MEET
Cavaletti Flip

Cavaletti Flip

Dynanism and agility are qualities common to environments contemporary corporate offices. Cavaletti developed the Flip line to meet versatility and ergonomic quality in the most varied types of use.

CHARACTERISTICS

MECHANISMS
Reclining System Backrest (SRE) or Backrest Without Adjustment (BG).

BACKREST
Injected plastic structure of High strength with height adjustment. Available in Black color and Gray.

ARMS
Adjustable Arms SL, SL New PU, SL New PP (all with Side Adjustment option) or 3D (Adjustable in height and forward PU support angle)). Option of fixed arm, model TC.

MESH
Membrane that adapts to curvature of the spine, providing support and constant ventilation. Available in Black and Gray colors.

SEAT
Seat in injected foam, with gas height adjustment.

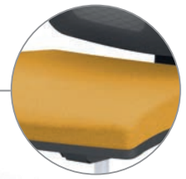

COATINGS
Coatings available in Polyester, Politex, Blend, Grid, Space, Haven, CEC - Stilo, Vinyl and Natural Leather.

BASES
Aluminum Base Options or Nylon, with 65mm casters in Nylon or PU. Steel base with Cover, 50mm casters only in Nylon or PU.

STRUCTURES
Z Structure with Integrated Arms, with glides or castors. Structure S with Fixed arms, without arms or with arms Integrated. Chrome Finish or Painting in Universal Black.

CONFIGURATIONS

43.103 SRE
Executive Swivel
Back Recliner System (SRE)
TC Arms
Nylon Base
65mm Casters

43.106 S
Executive Visitor
S Structure
Loop Arms

43.106 SI
Executive Visitor
SI Structure
Integrated Arms

43.106 Z
Executive Visitor
Z Structure
Integrated Arms

43.106 Z ROD
Executive Visitor
Z Structure with 50mm Casters
Integrated Arms

43.122
Stool
Fixed Backrest
TC Arms
Nylon Base with glides (Plastic Base Option)
*Backrest Recliner System (SRE) Optional

43.110
Executive Bench
Interleaved Loop Arms
Black or Chrome Foot Structure
Back glides with Adjustment
*Not available with TC Arms

MESH COLORS

Black

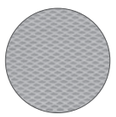

Gray

Cavaletti®

TECHNICAL DRAWINGS

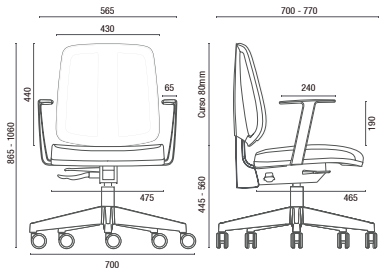

43.103 SRE **Executive Swivel**

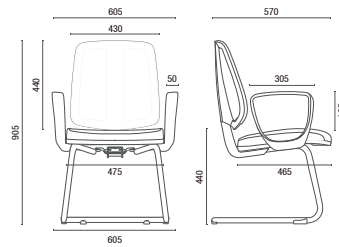

43.106 S **Executive Visitor**

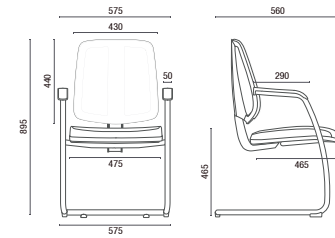

43.106 SI **Executive Visitor**

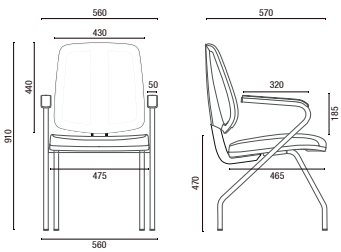

43.106 Z **Executive Visitor**

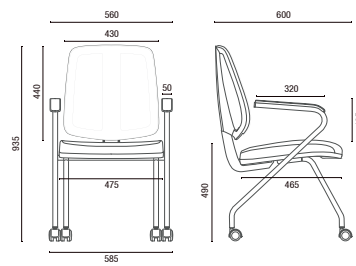

43.106 Z ROD **Executive Visitor**

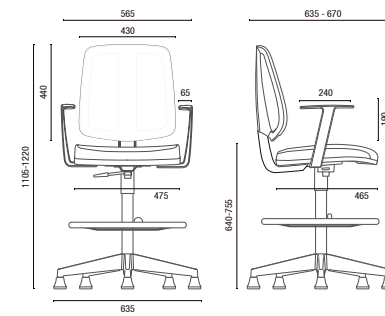

43.122 **Stool**

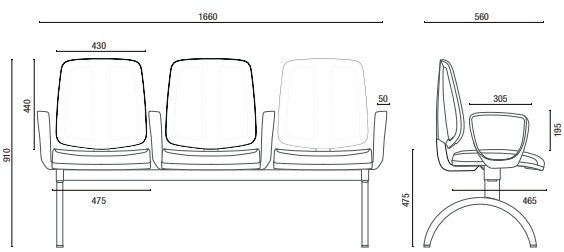

43.110 **Executive Bench**

Interleaved Loop Arm Widths:
2 seats – 1110mm
3 seats – 1660mm
4 seats – 2195mm
5 seats – 2735mm

NOTE: Extreme measurements obtained without using a load gauge.

©Copyright 2021 Cavaletti S/A - All rights reserved. Cavaletti S/A reserves the right to change products at any time and without prior notice. Some items are optional and may not be part of the base product.JUN/2021 V2.

Cavaletti®
PROFESSIONAL SEATING

Cavaletti S/A Professional Seating
Street Dr. Hiram Sampaio, 550
Erechim/RS Brasil 99.706-461
Fone/Fax: (54) 3520.4100
atendimento@cavaletti.com.br
www.cavaletti.com.br

6 YEARS of WARRANTY Cavaletti

Look for FSC® certified products
FSC www.fsc.org FSC® C130850
The mark of responsible forestry

ABNT-ISO9001 | ABNT-ISO14001 | ABNT-ISO45001 | NBR13962 | NR17

QUALIDADE-ABNT-AMBIENTAL PE-165

*Certified Products with Ecological Label (Quality - ABNT - Environmental) or ABNT NBR 13962 Standard, under consultation with the Commercial Department - Public Sector.

Cavaletti®

PROFESSIONAL SEATING

Cavaletti Air

Cavaletti Air

Air line products adapt to the shapes and needs of human beings. With adjustments designed to offer excellent ergonomics and comfort for heavy use, Air offers individual adjustment options such as lumbar support height and seat depth, which significantly increases body support areas, adapting according to the constitution of each user.

CHARACTERISTICS

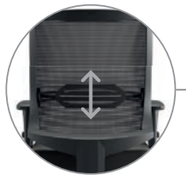

LUMBAR SUPPORT
Adjustable Lumbar Support integrated into the backrest, allows for vertical adjustment of 50 mm of travel. Better support for the spine.

COATINGS
Available seat coatings in Polyester, Polytex, Blend, Grid, Space, Haven, CEC - Stilo, Vinyl and Natural Leather.

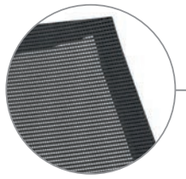

BACKREST
High-resistance injected plastic structure and support in mesh, available in Black and Gray.

ARMREST
Adjustable Armrest SL, SL New PU, SL New PP (all with Side Adjustment option) or 3D (adjustable in height, advance and angle of PU support). Integrated Armrest in fixed models.

MECHANISM
4-stage Syncron mechanism with front maniple tension adjustment or SRE MC mechanism (both with seat depth adjustment option). Rotating platforme option for Meeting Rooms (SR).

SEAT
Made of high performance foam with Gas Height Adjustment and Depth Adjustment option.

BASES
Base options in Aluminum or Nylon, with 65mm castors in Nylon or PU. Base in Steel with Plastic Cover, only 50mm castors in Nylon or PU.

CONFIGURATIONS

27001
Swivel Chair
Syncron RP
Adjustable Lumbar Support
3D Armrest
Aluminum base

27001
Swivel Chair
Syncron RP
Adjustable Lumbar Support
3D Armrest
Nylon base

27006 SI
Visitor Chair
SI Structure
Integrated armrest
Black color Mesh

27006 SI
Visitor Chair
SI Structure
Integrated armrest
Gray color Mesh

MESH COLORS

Black

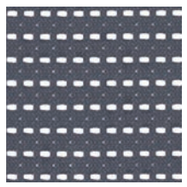

Gray

Cavaletti®

TECHNICAL DRAWINGS

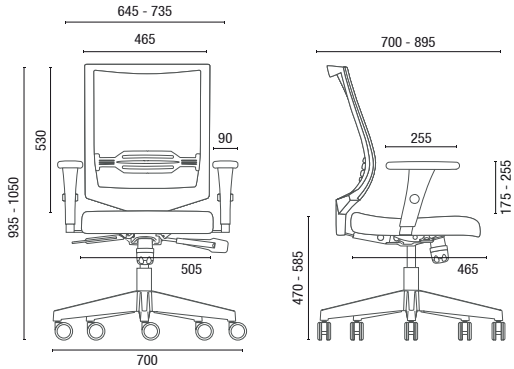

27001 **Swivel Chair**

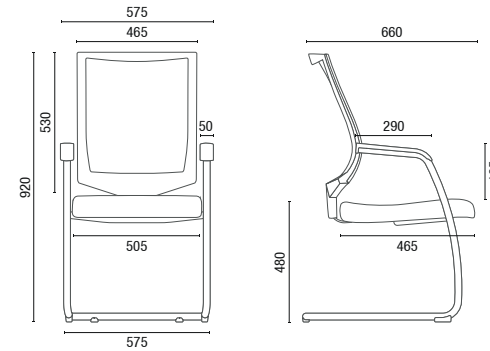

27006 SI **Visitor Chair**

NOTE: Extreme measurements obtained without using a load gauge.

Cavaletti S/A Professional Seating
Street Dr. Hiram Sampaio, 550
Erechim/RS Brasil 99.706-461
Fone/Fax: (54) 3520.4100
atendimento@cavaletti.com.br
www.cavaletti.com.br

Cavaletti® PROFESSIONAL SEATING

6 YEARS of WARRANTY Cavaletti

Look for FSC® certified products
FSC www.fsc.org FSC® C130850
The mark of responsible forestry

ABNT-ISO9001 ABNT-ISO14001 ABNT-ISO45001 NR17

©Copyright 2021 Cavaletti S/A - All rights reserved. Cavaletti S/A reserves the right to change products at any time and without prior notice. Some items are optional and may not be part of the base product.JUN/2021 V2.

Cavaletti®

PROFESSIONAL SEATING

Cavaletti NewNet
Cavaletti NewNet Soft

Cavaletti NewNet

The NewNet line offers the unique experience provided by the mesh backrest. Developed to continuously adapt to the curvature of the spine and provide greater support, this material also provides better natural ventilation when in use. NewNet Soft is the result of the union of the double membrane mesh with the flexibility of colors and coatings materials, combining the ergonomics provided by the mesh with the variety of finishes of an upholstered chair, in a sophisticated and unique design.

NOTE: Product in this image and on the cover of this catalog with Amber Orange Grid coating (361)

CHARACTERISTICS

ACCESSORIES
Headrest option available for models 16001 and 16501.

MECHANISM
4-stage Syncron mechanismwith front maniple tension adjustment or SRE MC Mechanism (both with option of seat depth adjustment) and on some models of the line, the Back Recline System (SRE).

COATINGS
Different upholstery options for NewNet seat or NewNet Soft seat and backrest: Polyester, Space, CEC-Stilo, Vinyl, Blend, Politex, Haven, Natural Leather and Grid.

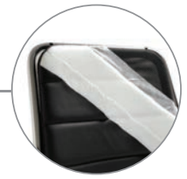

BACKREST
Double membrane mesh (16000 models) with coating option for NewNet Soft (16500 models).

ADJUSTABLE ARMREST
Swivel Models with Adjustable Armrest SL, SL New PU, SL New PP (all with Side Adjustment option) or 3D (adjustable in height, advance and angle of the PU support).

SEAT
Seat in injected foam with Gas Height Adjustment.

BASES
Base options in Aluminum or Nylon, with 65mm castors in Nylon or PU. Stamped or Steel Base with Plastic Cover, only 50mm castors in Nylon or PU.

STRUCTURE
Fixed structures with Integrated Armrest. Chrome or Black Universal Finish.

NOTE: Product in this image coated in Natural Leather Caramel and in Black detail.

CONFIGURATIONS

NEWNET

16001 AC
Swivel Chair
Syncron
Armrest 3D
Aluminum Base

16001
Swivel Chair
Syncron
Armrest 3D
Stamped Base

16002
Swivel Chair
Syncron
Armrest 3D
Nylon Base

16003 SRE
Swivel Chair
Backrest Recline System
Armrest SL
Nylon Base

16006 S
Visitor Chair
S Structure
Integrated Armrest

16010
Bench
L2048 Fixed
Armrest Loop Intercalated
Rear Slider with Adjustment

16010
Bench
L2048 Fixed
Rear Slider with Adjustment

NOTE: Product in this image with Graphite Polyester coating (257)

NEWNET SOFT

16501 AC
Swivel Chair
Syncron
Armrest 3D
Aluminum Base

16501
Swivel Chair
Syncron
Armrest 3D
Stamped Base

16503 SRE
Swivel Chair
Backrest Recline System
Armrest SL New PU
Stamped Base

16506 S
Visitor Chair
S Structure
Integrated Armrest

NOTE: Product in this image with Beige CEC-Stilo coating (080)

Cavaletti®

TECHNICAL DRAWINGS

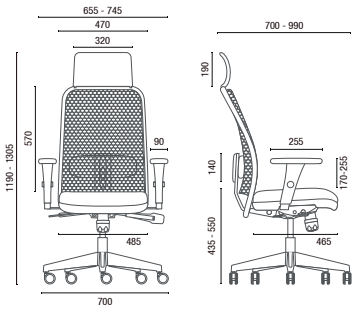

16001 AC **Swivel Chair**

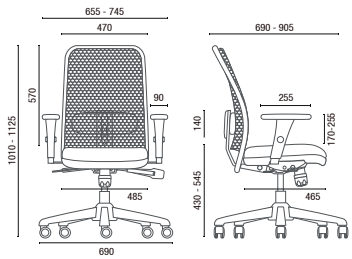

16001 **Swivel Chair**

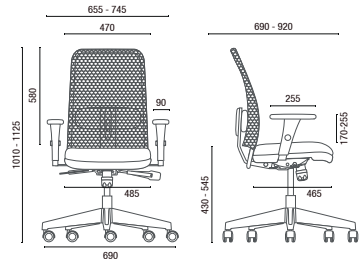

16002 **Swivel Chair**

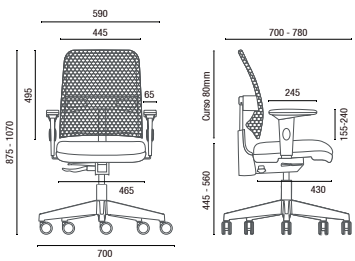

16003 SRE **Swivel Chair**

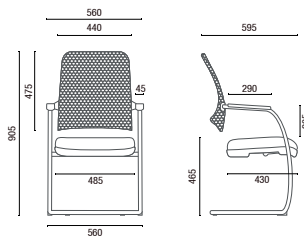

16006 S **Visitor Chair**

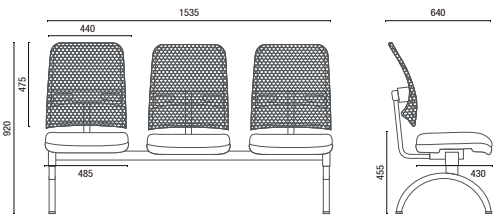

16010 **Bench**

Armless widths:	Widths with intercalated Loop Arm:
2 Seats- 1010mm	2 Seats - 1145mm
3 Seats- 1535mm	3 Seats- 1675mm
4 Seats- 2070mm	4 Seats - 2190mm
5 Seats- 2600mm	5 Seats- 2730mm

NEWNET SOFT

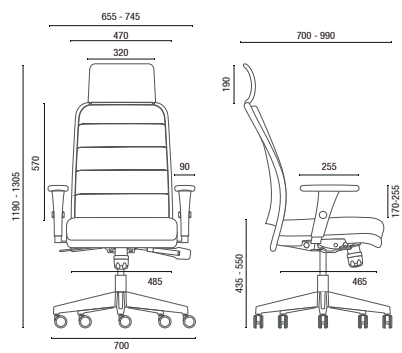

16501 AC **Swivel Chair**

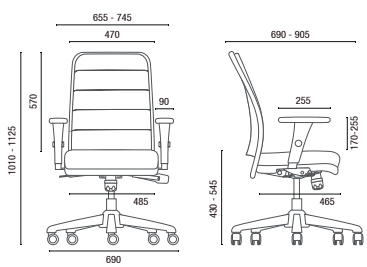

16501 **Swivel Chair**

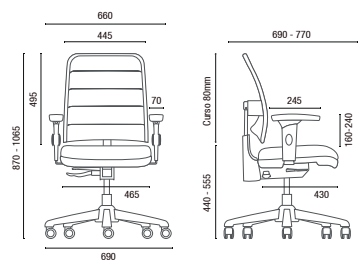

16503 SRE **Swivel Chair**

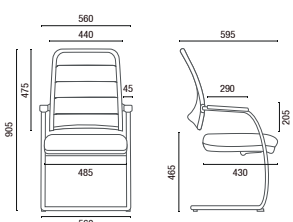

16506 S **Visitor Chair**

NOTE: Extreme measurements obtained without using a load gauge.

©Copyright 2021 Cavaletti S/A - All rights reserved. Cavaletti S/A reserves the right to change products at any time and without prior notice. Some items are optional and may not be part of the base product. JUN/2021 V2.

Cavaletti®
PROFESSIONAL SEATING

Cavaletti S/A Professional Seating
Street Dr. Hiram Sampaio, 550
Erechim/RS Brasil 99.706-461
Fone/Fax: (54) 3520.4100
atendimento@cavaletti.com.br
www.cavaletti.com.br

6 YEARS of WARRANTY Cavaletti

Look for FSC® certified products
FSC www.fsc.org FSC® C130850
The mark of responsible forestry

ABNT-ISO9001 | ABNT-ISO14001 | ABNT-ISO45001 | NBR13962 | NR17

QUALIDADE-ABNT-AMBIENTAL PE-165

*Certified Products with Ecological Label (Quality - ABNT - Environmental) or ABNT NBR 13962 Standard, under consultation with the Commercial Department - Public Sector.

Cavaletti®

PROFESSIONAL SEATING

Cavaletti PRO

Cavaletti Pro

Dynamic workspaces call for comfortable seating, practical and durable, that integrate with the architecture of each environment. Created to serve operational and management areas, the Pro line offers solutions to intelligently serve a wide variety of users, with a high level of comfort and functionality.

CHARACTERISTICS

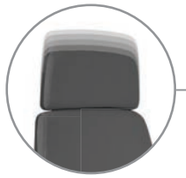

HEAD SUPPORT

Headrest with 5 adjustment positions and 35 mm of travel. With generous dimensions, it offers greater support to the cervical region.

BACKREST

High (L AC), High (L), High (Operational) and Medium (Operational) backrests, with anatomical curvatures for Better spinal support.

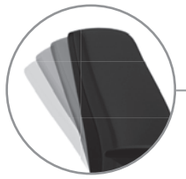

MECHANISMS

4-stage Syncron mechanism with front handle tension adjustment (with seat depth adjustment option), Relax Mechanism or Seat Recline System Backrest (SRE). Turntable option for Meeting Rooms (SR).

BASES

Base options in Aluminum or Nylon, with 65mm castors in Nylon or PU. Steel Base with Cover, 50mm Casters Only in Nylon or PU.

38001 L AC
Swivel Higback
Syncron
SL Armrests
Aluminum Base

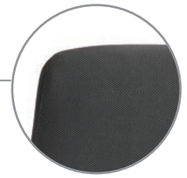

COATINGS

Selected fabrics with double seams in the options: Polyester, Politex, Blend, Grid, Haven, Space, CEC - Stilo, Vinyl and Natural Leather.

ARMRESTS

Adjustable Arms SL, SL New PU, SL New PP (all with option of Side Adjustment) or 3D (adjustable in height, advance and PU support angle).

SEAT

Seat in injected foam with gas height adjustment. Optional Depth adjustment when Syncron mechanism is available.

STRUCTURES

Fixed bases in the Swing option with or without Integrated Arms (S or SI) and Stabilizer glides Chrome or Black Universal Finish.

CONFIGURATIONS

38001 L AC
Swivel Highback
Syncron
SL Armrests
Steel Base with Cover

38001 L
Swivel Highback (Task)
Syncron
SL New PU Arm
Steel Base with Cover

38001 SRE
Swivel Midback
Backrest Recline System
SL Armrests
Steel Base with Cover

38003 SRE
Swivel Midback (Task)
Backrest Recline System
SL Armrests
Steel Base with Cover

38022 SRE
Swivel Stool
Backrest Recline System
SL Armrests
Steel Base with Cover

38006 SI
Visitor
SI Structure
Integrated Arms

38006 S
Visitor
S Structure

38007 SI
Visitor Midback
SI Structure
Integrated Arms

38007 S
Visitor Midbak
S Structure

38010
Bench
Back glides with adjustment

38010
Bench
American Intercalated Arms
Back glideswith adjustment

Cavaletti®

TECHNICAL DRAWINGS

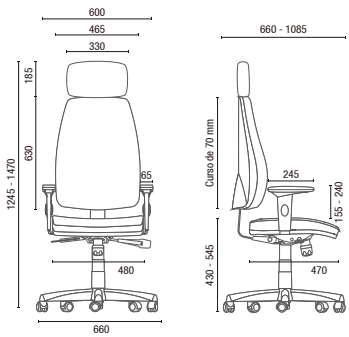

38001 L AC SYNCRON **Swivel Highback**

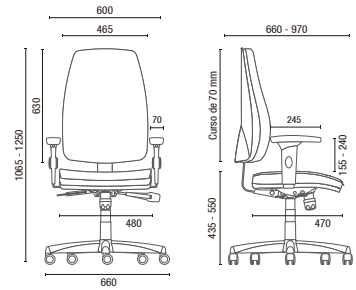

38001 L SYNCRON **Swivel Highback (task)**

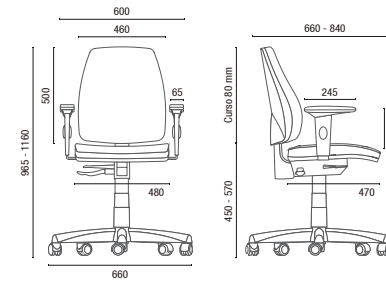

38001 SRE **Swivel Midback**

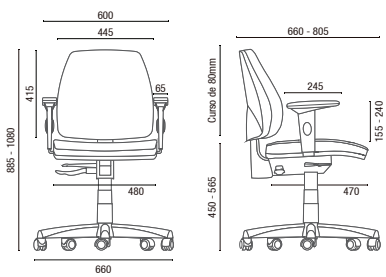

38003 SRE **Swivel Midback (task)**

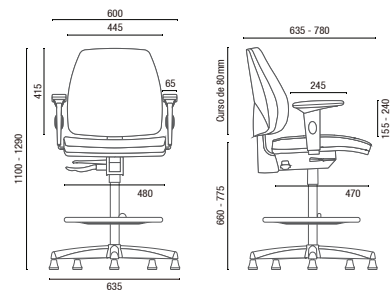

38022 SRE **Swivel Stool**

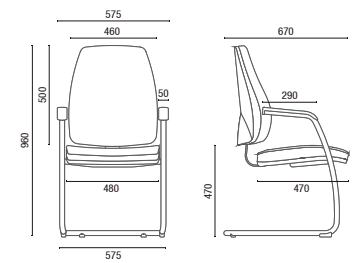

38006 SI **Visitor**
Integrated Armrests

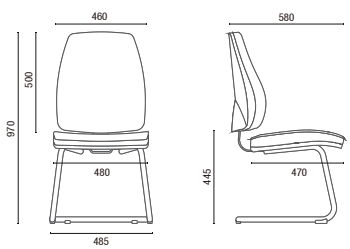

38006 S **Visitor**

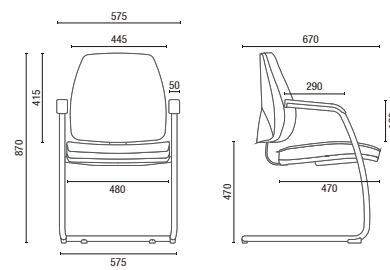

38007 SI **Visitor Midback**
Integrated Armrests

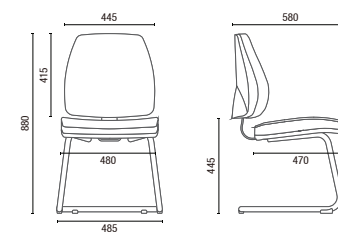

38007 S **Visitor Midback**

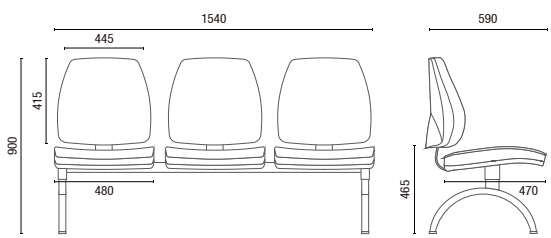

38010 **Bench**
Widths without Arm:
2 seats – 1015mm
3 seats – 1540mm
4 seats – 2055mm
5 seats – 2600mm

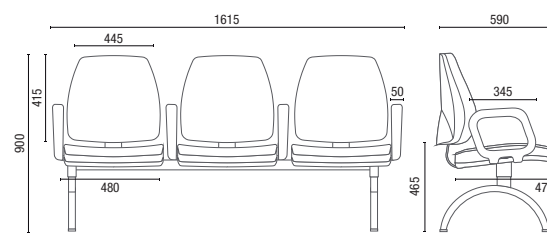

38010 **Bench**
American Interleaved Arm Widths:
2 seats – 1085mm
3 seats – 1615mm
4 seats – 2130mm
5 seats – 2670mm

NOTE: Extreme measurements obtained without using a load gauge.

Cavaletti S/A Professional Seating
Street Dr. Hiram Sampaio, 550
Erechim/RS Brasil 99.706-461
Fone/Fax: (54) 3520.4100
atendimento@cavaletti.com.br
www.cavaletti.com.br

Look for FSC® certified products
FSC® C130850
The mark of responsible forestry

ABNT-ISO9001 ABNT-ISO14001 ABNT-ISO45001 NBR13962 NR17

*Certified Products with Ecological Label (Quality - ABNT - Environmental) or ABNT NBR 13962 Standard, under consultation with the Commercial Department - Public Sector.

©Copyright 2021 Cavaletti S/A - All rights reserved. Cavaletti S/A reserves the right to change products at any time and without prior notice. Some items are optional and may not be part of the base product.JUN/2021 V2.

Cavaletti®
PROFESSIONAL SEATING
Cavaletti Mais

Cavaletti Mais

The Mais line offers design centered on the essentials, adapting to different styles of spaces. Developed using concepts ergonomics and state-of-the-art engineering, Mais has products functional and practical to use, facilitating the search for posture ideal workspace in a simple and uncomplicated way.

CHARACTERISTICS

COATINGS
Coatings available in Haven fabrics, Polyester, Politex, Mescla, Grid, Space, CEC - Stilo, Vinyl and Natural Leather.

MECHANISMS
4-stage Syncron mechanism with tension regulation by front handle (with depth adjustment option of the seat). Turntable option for Meeting Rooms (SR).

BACKREST
High and Medium backrests with anatomical curvatures for better spinal support.

ARMRESTS
Swivel models with Adjustable Arms SL, SL New PU, SL New PP (all with Side Adjustment option) or 3D (adjustable in height, advance and angle of PU support).

SEAT
Seat in injected foam with Gas Height Adjustment.

BASES
Base options in Aluminum or Nylon, with 65mm castors in Nylon or PU. Covered Steel Base, Casters Only 50mm in Nylon or PU.

STRUCTURE
Fixed base in Swing structure with Integrated Arm (SI) and fixed glides. Chrome or Black Universal Finish.

CONFIGURATIONS

37001
Swivel Highback
Syncron
3D Armrests
Aluminum Base

37001
Swivel Midback
Syncron
3D Armrests
Nylon Base

37002
Swivel Midback
Syncron
SL New Pu Armrests
Nylon Base

37006
Visitor
"SI" Structure
Integrated Arms

Cavaletti®

TECHNICAL DRAWINGS

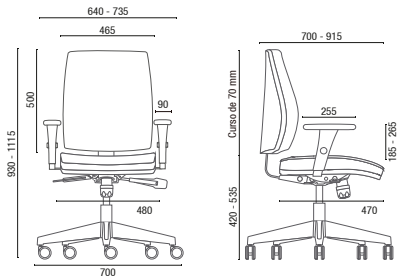

37001 **Swivel Highback**

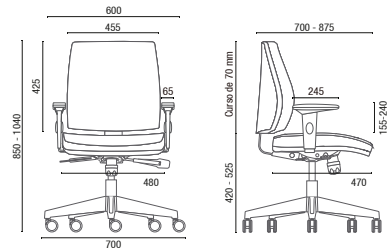

37002 **Swivel Midback**

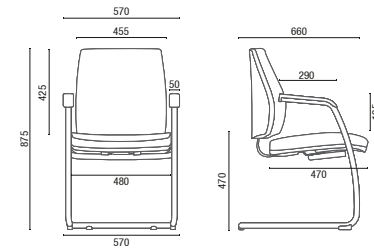

37006 SI **Visitor**

NOTE: Extreme measurements obtained without using a load gauge.

©Copyright 2021 Cavaletti S/A - All rights reserved. Cavaletti S/A reserves the right to change products at any time and without prior notice. Some items are optional and may not be part of the base product.JUN/2021 V2.

Cavaletti®
PROFESSIONAL SEATING

Cavaletti S/A Professional Seating
Street Dr. Hiram Sampaio, 550
Erechim/RS Brasil 99.706-461
Fone/Fax: (54) 3520.4100
atendimento@cavaletti.com.br
www.cavaletti.com.br

6 YEARS of WARRANTY Cavaletti

Look for FSC® certified products
FSC www.fsc.org FSC® C130850
The mark of responsible forestry

ABNT-ISO9001 | ABNT-ISO14001 | ABNT-ISO45001 | NBR13962 | NR17

QUALIDADE-ABNT-AMBIENTAL PE-165

*Certified Products with Ecological Label (Quality - ABNT - Environmental) or ABNT NBR 13962 Standard, under consultation with the Commercial Department - Public Sector.

Cavaletti®

PROFESSIONAL SEATING

Cavaletti Slim

Cavaletti Slim

With Original Cavaletti Design, the Slim line has a back and seat with anatomical curvatures, Syncron mechanism with four locking positions, option of steel or aluminum bases and arms with 3D movements. In addition to being a complete corporate line, its minimalist design makes Slim ready to integrate more contemporary projects.

CHARACTERISTICS

COATINGS
Different coating options: Polyester, Grid, Space, CEC-Stilo, Vinyl and Natural Leather.

MECHANISMS
4-stage Syncron mechanism with front maniple tension adjustment, Relax Mechanism or, in some models of the line, the Backrest Recline System (SRE).

SEAT
Seat in high performance foam, with Gas Height Adjustment.

ARMREST
Swivel models with Adjustable Armrest SL, SL New PU, SL New PP (all with Side Adjustment option) or 3D (adjustable in height, advance and angle of PU support).

BASES
Base options in Aluminum or Nylon, with 65mm casters in Nylon or PU. Base in Steel with Plastic Cover, only 50mm castors in Nylon or PU.

STRUCTURES
Fixed structures with Integrated Armrest. Optional casters in the Z structure. Chrome or Black Universal finish.

CONFIGURATIONS

18001
Swivel Chair
Syncron
SL Armrest
Aluminum Base

18002
Swivel Chair
Syncron
SL Armrest
Stamped Base

18004 SRE
Swivel Chair
Backrest Recliner System
SL Armrest
Nylon Base

18006 Z ROD
Visitor Chair
Z Structure with casters
Integrated Armrest

18006 Z
Visitor Chair
Z Structure
Integrated Armrest

18006 P
Visitor Chair
P Structure
Integrated Armrest

18006 S
Visitor Chair
S Structure
Integrated Armrest

18007 S
Visitor Chair
S Structure
Integrated Armrest

18010
Bench
Armrest Z Intercalated
Optional without armrest
Rear Slider with Adjustment

Cavaletti®

TECHNICAL DRAWINGS

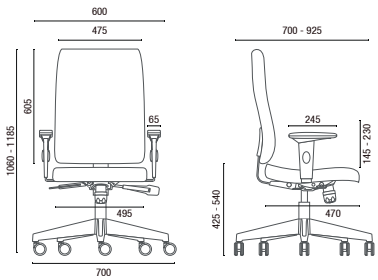

18001 **Swivel Chair**

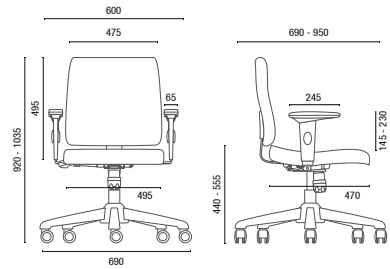

18002 **Swivel Chair**

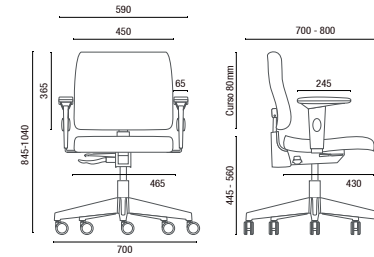

18004 SRE **Swivel Chair**

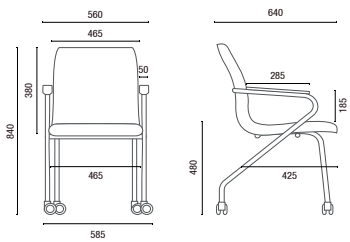

18006 Z ROD **Visitor Chair**

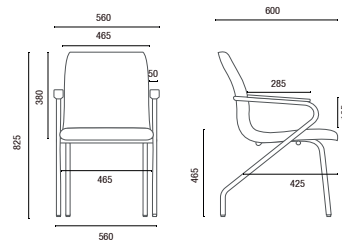

18006 Z **Visitor Chair**

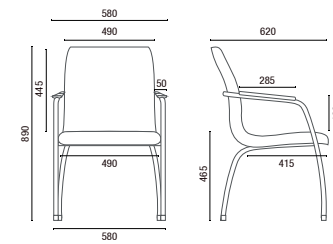

18006 P **Visitor Chair**

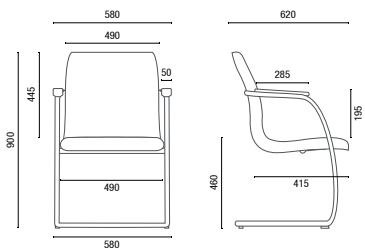

18006 S **Visitor Chair**

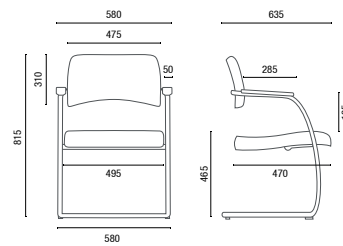

18007 S **Visitor Chair**

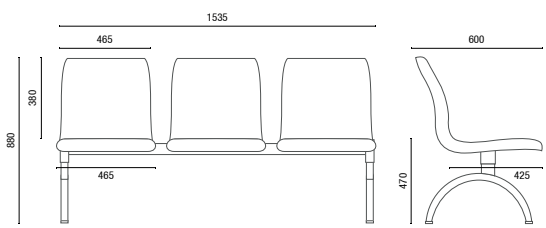

18010 **Bench**

Armless widths:	Intercalated Z Arm Widths:
2 Seats – 1000mm	2 Seats – 1105mm
3 Seats – 1535mm	3 Seats – 1660mm
4 Seats – 2070mm	4 Seats – 2160mm
5 Seats – 2605mm	5 Seats – 2675mm

NOTE: Extreme measurements obtained without using a load gauge.

Cavaletti®
PROFESSIONAL SEATING

Cavaletti S/A Professional Seating
Street Dr. Hiram Sampaio, 550
Erechim/RS Brasil 99.706-461
Fone/Fax: (54) 3520.4100
atendimento@cavaletti.com.br
www.cavaletti.com.br

6 YEARS of WARRANTY Cavaletti

Look for FSC® certified products
FSC www.fsc.org FSC® C130850
The mark of responsible forestry

ABNT-ISO9001 | ABNT-ISO14001 | ABNT-ISO45001 | NBR13962 | NR17

QUALIDADE-ABNT-AMBIENTAL PE-165

*Certified Products with Ecological Label (Quality - ABNT - Environmental) or ABNT NBR 13962 Standard, under consultation with the Commercial Department - Public Sector.

©Copyright 2021 Cavaletti S/A - All rights reserved. Cavaletti S/A reserves the right to change products at any time and without prior notice. Some items are optional and may not be part of the base product.JUN/2021 V2.

Cavaletti®

PROFESSIONAL SEATING

Cavaletti Start

Cavaletti Start

The Start line offers a variety of models that adapt to different work spaces. With high quality and selected finishes, Start models are ergonomic and seek the ideal comfort for day-to-day offices.

CHARACTERISTICS

FINISHES
Different coating options:
Polyester, Grid, Space, CEC - Stilo and Vinyl.

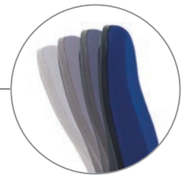

MECHANISMS
4-stage Syncron mechanism with tension regulation by front handle, Backrest Recline System (SRE) or Relax mechanism (with backrest height adjustment option).
On BG models, fixed backrest option (spring or L 2048) or adjustable backrest (L 2048).

BACKREST
Backrests at three different heights:
Higback, Midback and Lowback

ARMRESTS
Adjustable arms SL, SL New PU, SL New PP (all with option of Side Adjustment) or 3D (adjustable in height, advance and angle of the PU support). Fixed Arms in American and Loop options

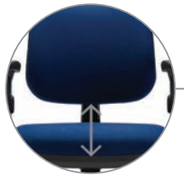

SEAT
Seat with gas height adjustment, with injected or expanded foam options. On models 4103, 4107, 4110 and 4123 only injected foam. On model 4003, only expanded foam.

BASES
Base options in Aluminum or Nylon, with 65mm castors in Nylon or PU. Printed or Steel Base with Cover, only 50mm castors in Nylon or PU.

STRUCTURES
Fixed structures in Arc type (A), Four legs (P) or Balance (S).

CONFIGURATIONS

4001
Swivel Highback
Relax Mech
SL Armrests

4002
Swivel Midback
Relax Mech
SL Armrests

4003
Swivel Extra Modelo (140 kgs)
Relax Mech
SL Armrests with Side Adjustment

4006 S
Visitor Highback
S Structure
American Armrests

4006 PUE
Visitor
Retractable Clipboard
American Armrests

4103
Swivel Lowback
Backrest Recline System
SL New PU Armrests

4107 S
Visitor Midback
S structure

4123
Stool
Backrest Recline System
SL New PU Armrests

4004
Swivel Lowback
L2048 with Adjustment
SL Armrests

4008 A
Visitor Lowback
Fixed L2048
Arch Structure

4022
Swivel Stool
L2048 with Regulation

L2048
Backrest Height Adjustment
(4004 and 4022)

4005
Bench
Individual American Armrests

4110
Bench

4005 U / 4110 U
Retractable Clipboard
Optional for 4005 and 4110

4009
Bench Lowback
L2048 fixed

Cavaletti®

TECHNICAL DRAWINGS

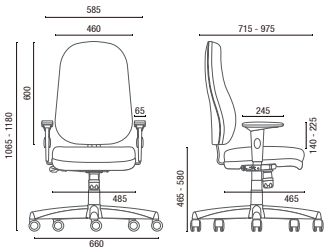

4001 **Swivel Highback**

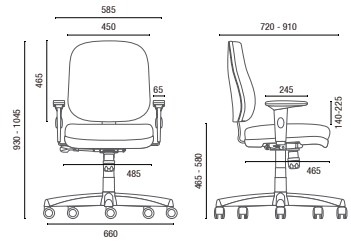

4002 **Swivel Midback**

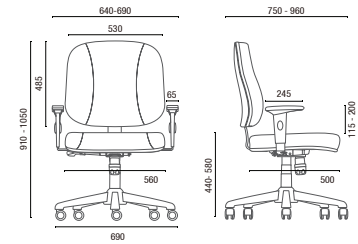

4003 **Swivel Extra Model (140 kgs)**

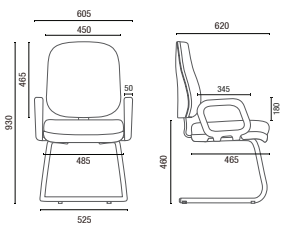

4006 S **Visitor Highback**

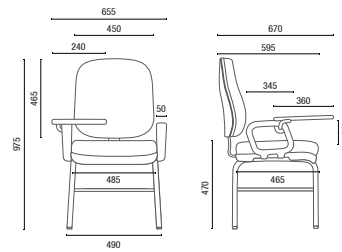

4006 PUE **Visitor with Clipboard**

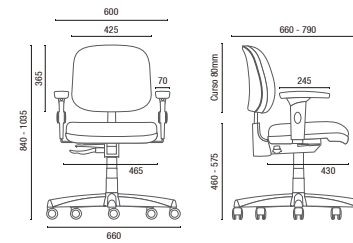

4103 SRE **Swivel Task**

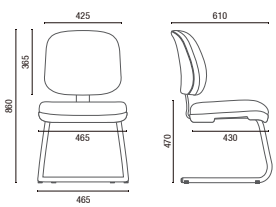

4107 S **Visitor Midback**

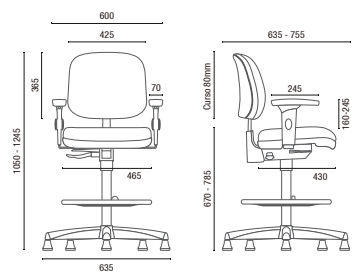

4123 SRE **Swivel Stool**

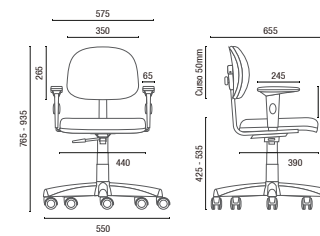

4004 **Swivel lowback**

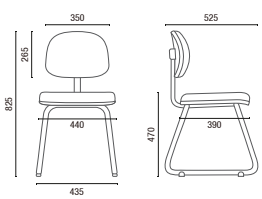

4008 A **Visitor Lowback**

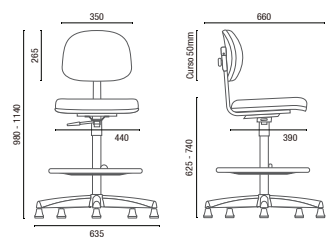

4022 BG **Swivel Stool Lowback**

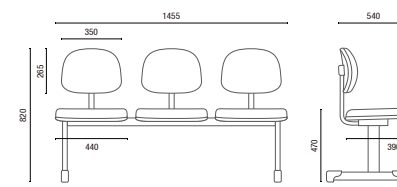

4009 **Bench**
Widths without Arm: 2 seats - 950mm 3 seats - 1455mm
4 seats - 1965mm 5 seats - 2470mm

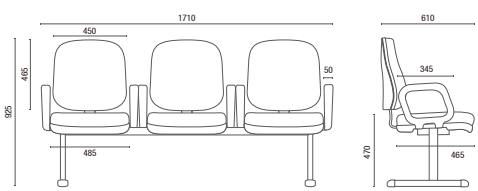

4005 **Bench**
Double Arm Widths: 2 seats - 1140mm 3 seats - 1710mm
4 seats - 2280mm 5 seats- 2850mm

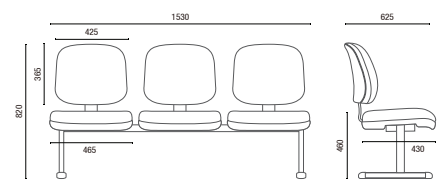

4110 **Bench**
Widths without Arm: 2 seats - 995mm 3 seats - 1530mm
4 seats - 2065mm 5 seats- 2595mm

NOTE: Extreme measurements obtained without using a load gauge.

Cavaletti®
PROFESSIONAL SEATING

Cavaletti S/A Professional Seating
Street Dr. Hiram Sampaio, 550
Erechim/RS Brasil 99.706-461
Fone/Fax: (54) 3520.4100
atendimento@cavaletti.com.br
www.cavaletti.com.br

6 YEARS of WARRANTY Cavaletti

Look for FSC® certified products
FSC www.fsc.org FSC® C130850
The mark of responsible forestry

ABNT-ISO9001 | ABNT-ISO14001 | ABNT-ISO45001 | NBR13962 | NR17

QUALIDADE-ABNT-AMBIENTAL PE-165

*Certified Products with Ecological Label (Quality - ABNT - Environmental) or ABNT NBR 13962 Standard, under consultation with the Commercial Department - Public Sector.

©Copyright 2021 Cavaletti S/A - All rights reserved. Cavaletti S/A reserves the right to change products at any time and without prior notice. Some items are optional and may not be part of the base product.JUN/2021 V2.

Cavaletti®

PROFESSIONAL SEATING

Cavaletti Stilo

Cavaletti Stilo

Equipped with the Original Cavaletti Recliner System (SRE), the Stilo line offers a series of ideal ergonomic adjustments to allow long working hours with proper posture, reducing physical strain. Its compact size only takes up the space needed, making it easy to move around in everyday life.

CHARACTERISTICS

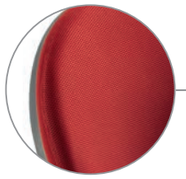

COATINGS
Different coating options: Polyester, Grid, Space, CEC-Stilo and Vinyl.

MECHANISMS
Backrest Recline System (SRE) or fixed BG or with adjustable backrest option (L 2048) on some models of the line.

SEAT
Seat in injected foam with Gas Height Adjustment.

ARMREST
Swivel Models with Adjustable Armrest SL, SL New PU, SL New PP (all with Side Adjustment option) or 3D (adjustable in height, advance and angle of the PU support). Fixed Armrest in American and Loop options.

BASE
Steel Base with Plastic Cover.
50mm castors in Nylon or PU.

STRUCTURES
Fixed structures in Arc (A), Toothpick (P) or Swing (S) options.
Finished with Silver or Universal Black paint.

CONFIGURATIONS

8203 SRE
Swivel Chair
Backrest Recliner System
SL New PU Armrest

8203
Swivel Chair
Flange
SL New PU Armrest
L2048 Backrest Support

L2048
Backrest
Height
Adjustment

8207 S
Visitor Chair
S Structure

8223
Swivel Chair Stool
L2048 Backrest Support

8210
Bench

Cavaletti®

TECHNICAL DRAWINGS

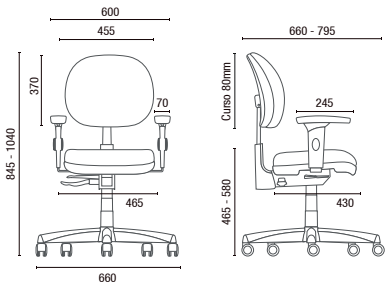

8203 SRE **Swivel Chair**

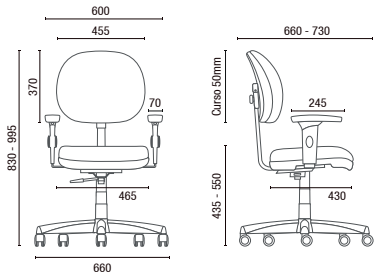

8203 BG **Swivel Chair**

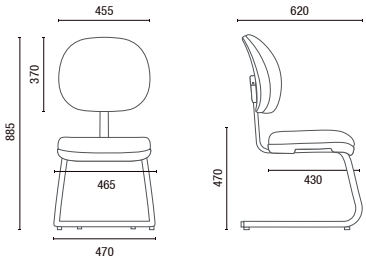

8207 S **Visitor Chair**

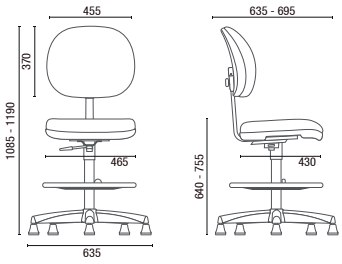

8223 **Swivel Chair Stool**

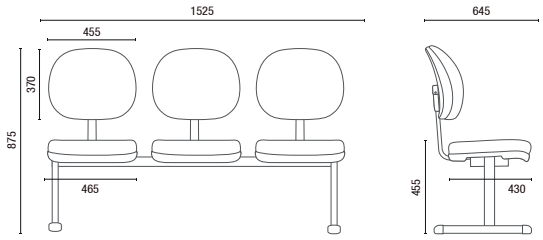

8210 **Bench**

Armless widths:
2 Seats – 1000mm
3 Seats – 1525mm
4 Seats – 2045mm
5 Seats – 2585mm

NOTE: Extreme measurements obtained without using a load gauge.

©Copyright 2021 Cavaletti S/A - All rights reserved. Cavaletti S/A reserves the right to change products at any time and without prior notice. Some items are optional and may not be part of the base product.JUN/2021 V2.

Cavaletti®
PROFESSIONAL SEATING

Cavaletti S/A Professional Seating
Street Dr. Hiram Sampaio, 550
Erechim/RS Brasil 99.706-461
Fone/Fax: (54) 3520.4100
atendimento@cavaletti.com.br
www.cavaletti.com.br

6 YEARS of WARRANTY Cavaletti

Look for FSC® certified products
FSC www.fsc.org FSC® C130850
The mark of responsible forestry

ABNT-ISO9001 | ABNT-ISO14001 | ABNT-ISO45001 | NBR13962 | NR17

QUALIDADE-ABNT-AMBIENTAL PE-165

*Certified Products with Ecological Label (Quality - ABNT - Environmental) or ABNT NBR 13962 Standard, under consultation with the Commercial Department - Public Sector.

Cavaletti®
PROFESSIONAL SEATING
Cavaletti StartPlus

Cavaletti StartPlus

With different finishing options, the Start Plus line combines handcrafted care with state-of-the-art technology. There are three available seam patterns that complete sophisticated environments in a subtle but striking way.

CHARACTERISTICS

COATINGS
Different coating options: Polyester, Grid, Space, CEC-Stilo and Vinyl.
Two sewing options according to the model (3000 and 6000).

MECHANISM
4-stage Syncron mechanism with tension regulation by front maniple, Backrest Recline System (SRE) or Relax mechanism (with backrest height adjustment option). On BG models, fixed backrest option (spring or L 2048) or adjustable backrest (L 2048).

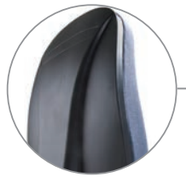

BACKREST
Backrest in four different heights according to models: President, Director, Executive and Secretary.

ARMREST
Swivel models with Adjustable Arms SL, SL New PU, SL New PP (all with Side Adjustment option) or 3D (adjustable in height, advance and angle of PU support). Fixed arms in American and Loop options.

SEAT
Seat in injected foam with Gas Height Adjustment.

BASES
Base options in Aluminum or Nylon, with 65mm castors in Nylon or PU. Base in Steel with Cover, only 50mm casters in Nylon or PU.

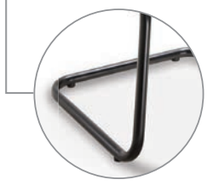

STRUCTURES
Fixed structures in Arc (A), 4 Foot (P) or Swing (S) options. Chrome Finish or Universal Black Painting.

CONFIGURATIONS

3001
President Swivel Chair
Relax
SL Armrest

3002
Director Swivel Chair
Relax
SL Armrest

3006 S
Director Visitor Chair
S Structure
American Armrest

3004 SRE
Secretary Swivel Chair
Back Recliner System
SL New PU Armrest

L2048
Backrest
Height
Adjustment

3008 S
Secretary Visitor Chair
S Structure

3022
Secretary Stool Chair
L2048 with Adjustment

3005
Director Bench
American Double Armrest

3009
Secretary Bench

6001
President Swivel Chair
Relax
SL Armrest

6002
Director Swivel Chair
Relax
SL Armrest

6006 S
Director Swivel Chair
S Structure
American Armrest

6104 SRE
Executive Swivel Chair
Back Recliner System
SL New PU Armrest

Cavaletti®

TECHNICAL DRAWINGS

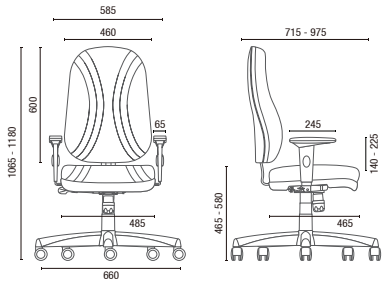

3001 **President Swivel Chair**

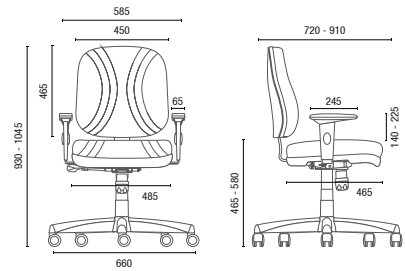

3002 **Director Swivel Chair**

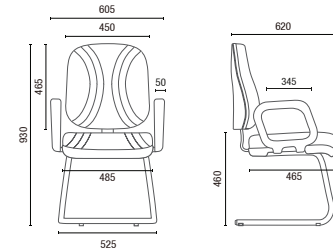

3006 S **Director Visitor Chair**

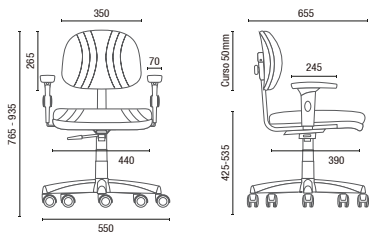

3004 **Secretary Swivel Chair**

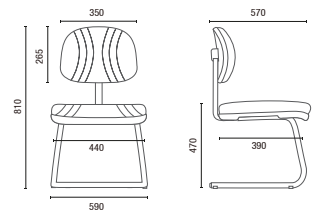

3008 S **Secretary Visitor Chair**

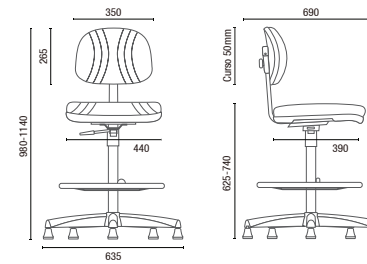

3022 BG **Secretary Stool Chair**

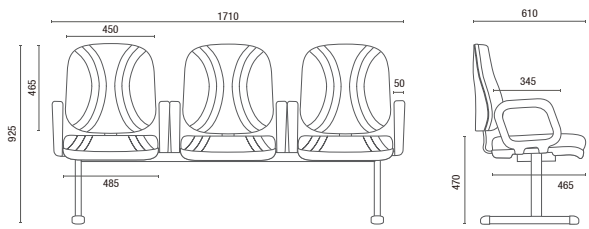

3005 **Diretor Longarina**

Double Arm Width:
2 seats – 1140mm 3 seats – 1710mm 4 seats – 2280mm 5 seats – 2580mm

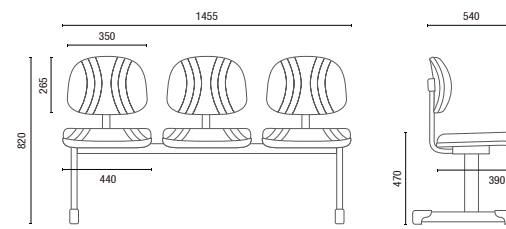

3009 **Secretary Bench**

Width without Arm:
2 seats – 950mm 3 seats – 1455mm 4 seats – 1965mm 5 seats – 2470mm

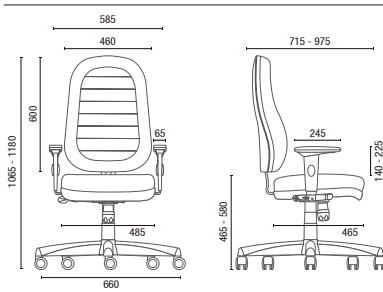

6001 **President Swivel Chair**

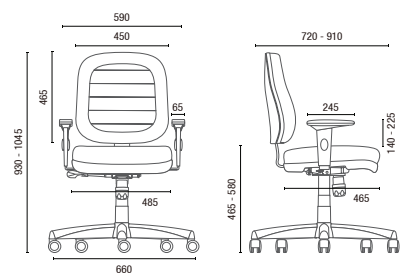

6002 **Director Swivel Chair**

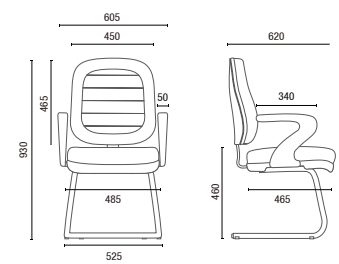

6006 S **Director Visitor Chair**

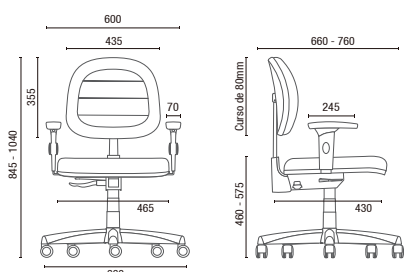

6104 **Executive Swivel Chair**

NOTE: Extreme measurements obtained without using a load gauge.

Cavaletti®
PROFESSIONAL SEATING

Cavaletti S/A Professional Seating
Street Dr. Hiram Sampaio, 550
Erechim/RS Brasil 99.706-461
Fone/Fax: (54) 3520.4100
atendimento@cavaletti.com.br
www.cavaletti.com.br

6 YEARS of WARRANTY Cavaletti

Look for FSC® certified products
FSC www.fsc.org FSC® C130850
The mark of responsible forestry

ABNT-ISO9001 ABNT-ISO14001 ABNT-ISO45001 NBR13962 NR17

QUALIDADE-ABNT-AMBIENTAL PE-165

*Certified Products with Ecological Label (Quality - ABNT - Environmental) or ABNT NBR 13962 Standard, under consultation with the Commercial Department - Public Sector.

©Copyright 2021 Cavaletti S/A - All rights reserved. Cavaletti S/A reserves the right to change products at any time and without prior notice. Some items are optional and may not be part of the base product. JUN/2021 V2.

Cavaletti®

PROFESSIONAL SEATING

Cavaletti Aura

Cavaletti Aura

Cavaletti Aura epitomizes precision and inspiration. Technology and contemporary design. Minimalism and, at the same time, a wealth of details. Because of this plurality, so present, Aura is a versatile product, capable of adapting to the most diverse projects and environments.

CHARACTERISTICS

BACKREST

High or Mid backrest options, allowing its use and composition in different environments.

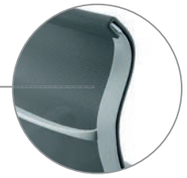

COATING

A single high-resistance membrane is responsible for providing comfort and a perfect finish. Available in Black, Gray or fabric.

MECHANISM

Syncron-type mechanism, with locking system in working position or in free-floating and automatic tension adjustment, adjusting to the user's weight without the need for manual adjustment.

ARMREST

The arms are fixed and follow the striking curves, which go from the backrest structure to the seat base.

BASES

Base options in Polished Aluminum and in Black and Gray colors, with mixed 60mm Castors.

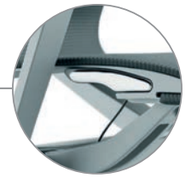

ADJUSTMENT

Adjustment controls are harmoniously integrated into the product design.

PRECISE DESIGN, INSPIRING SHAPES.

Cavaletti Aura combines technology and harmonic design, sophistication and versatility. A minimalist product in design, with numerous important details that you need to know.

CONFIGURATIONS

Check out the possible combination options for Cavaletti Aura below and choose yours.

44.101
Swivel Chair
Fabric
Polished Aluminum Base

44.101
Swivel Chair
Black Mesh
Black Base

44.101
Swivel Chair
Gray Mesh
Gray Base

44.102
Swivel Chair
Fabric
Polished Aluminum Base

44.102
Swivel Chair
Black Mesh
Black Base

44.102
Swivel Chair
Gray Mesh
Gray Base

BASES

There are 3 different base options: in Polished Aluminum also Nylon base in black or gray color.

Polished Aluminum

Black

Gray

COATINGS

Cavaletti Aura has 3 different coatings: Black Mesh, Gray Mesh and a Fabric coating. Check out the textures of each material below.

Fabric*

Black Mesh

Gray Mesh

*Fabric Coating can only be used with Black structure.

TECHNICAL DRAWINGS

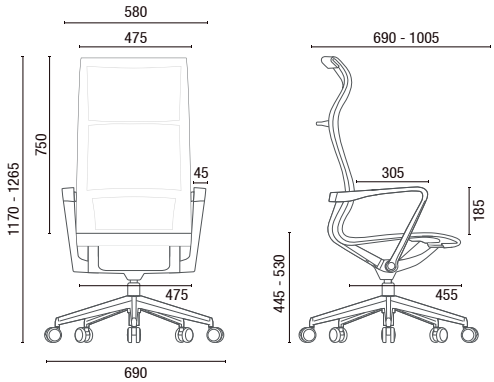

44.101 **Swivel Chair**

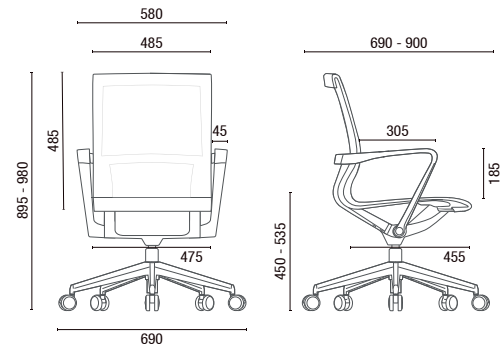

44.102 **Swivel Chair**

NOTE: Extreme measurements obtained without using a load gauge.

Cavaletti S/A Professional Seating
Street Dr. Hiram Sampaio, 550
Erechim/RS Brasil 99.706-461
Fone/Fax: (54) 3520.4100
atendimento@cavaletti.com.br
www.cavaletti.com.br

6 YEARS of WARRANTY Cavaletti
Look for FSC® certified products
FSC www.fsc.org FSC® C130850
The mark of responsible forestry
ABNT-ISO9001 ABNT-ISO14001 ABNT-ISO45001 NR17

©Copyright 2021 Cavaletti S/A - All rights reserved. Cavaletti S/A reserves the right to change products at any time and without prior notice. Some items are optional and may not be part of the base product.JUN/2021 V2.

Cavaletti®

PROFESSIONAL SEATING

Cavaletti Leef

Cavaletti Leef

Cavaletti Leef is an authorial design product, with minimalist lines and at the same time full of personality. A chair marked by its iconic look and a perfect combination of innovative features, capable of guaranteeing maximum comfort, whether for short or long term use.

NOTE: Product in this image with coating in Haven Campo with Olive Stitching Code 715

CHARACTERISTICS

The union between technical features and carefully designed details make Leef a unique chair, especially when you customize it according to your project.

MECHANISM
4-stage Syncron mechanism with front maniple tension adjustment and seat depth adjustment.

FLEXIBLE BACKREST
Backrest with malleable structure, able to adapt to change of position.

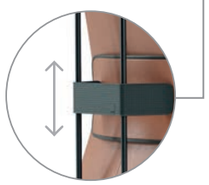

LUMBAR SUPPORT
Adjustable lumbar support (280mm stroke) to body anatomy.

BASE
Base options: Twin (Aluminum in two tones) or Up (Nylon), with 65mm castors in Nylon or PU.

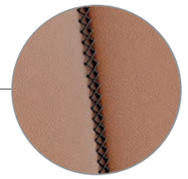

COATINGS
Coatings in Natural Leather, CEC-Stilo, Haven and Politex, with contrasting and subtle stitching options for each color.

ARMREST
4D armrest (adjustable in 4 dimensions) or 3D armrest (adjustable in height, advance and angle of the PU support).

SEAT
6-stage depth adjustment (50mm stroke).

NOTE: Product in these images and on the cover of this catalog coated in Natural Caramel Leather with Black Stitching Code 702.

SIMPLY UNUSUAL

With a light and distinctive design, the Leef chair can be used for both directive and operative use.

NOTE: Products in this image coated in CEC-Stilo Fendi with Gray Stitching Code 754 and Brown with Copper Stitching Code 750.

Cavaletti partner since 2011, Marc Sapetti was born in Andorra and graduated in industrial design in Barcelona. In the following years he worked in relevant offices in Europe, culminating in the creation of his own office. Today, Sapetti Design Consultancy is a multi-award winning studio alongside Cavaletti. Among the awards are the IF Awards (Cavaletti Go) and the Good Design Award (Cavaletti Idea and Cavaletti Vélo).

CONFIGURATIONS

45.101
Swivel Chair
Syncron RP
4D-CA Armrest
(Aluminum) Twin Base

45.101
Swivel Chair
Syncron RP
3D Armrest
(Aluminum) Twin Base

45.101
Swivel Chair
Syncron RP
4D-CA Armrest
(Nylon) UP Base

NOTE: Products in these images coated in Black Natural Leather with Copper Stitching Code 700.

COATINGS

Use your imagination to customize your environment by setting up unique chairs. Check out the textures of each available coating below. There are several color options between Haven, CEC-Stilo, Natural Leather and Politex.

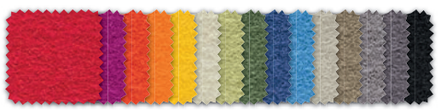

HAVEN
15 Colors.

CEC - STILO
10 Colors.

NATURAL LEATHER
02 Colors.

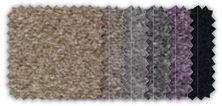

POLITEX
06 Colors.

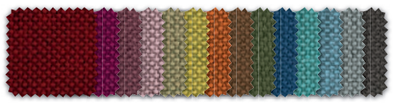

GRID
14 Colors.

COMBINATIONS

Choose the coating and stitching pattern combination that best suits your project. There are 66 options available.
To specify the combination, use the codes below. Example: Black Leather + Copper Stitching = Code 700 (Coating + Stitching = Code).

Leather

COATING + STITCHING

BLACK COPPER	CÓD 700	BLACK BLACK	CÓD 701
CARAMEL BLACK	CÓD 702	CARAMEL COPPER	CÓD 703

Politex

COATING + STITCHING

COFFEE W/ MILK COPPER	CÓD 734	COFFE W/ MILK DARK GRAY	CÓD 735
BROWN SAND	CÓD 736	BROWN BLACK	CÓD 737
METAL GRAY RED	CÓD 738	METAL GRAY DARK GRAY	CÓD 739
DARK GRAY RED	CÓD 740	DARK GRAY DARK GRAY	CÓD 741
LILAC PINK	CÓD 742	LILAC PURPLE	CÓD 743
BLACK COPPER	CÓD 744	BLACK BLACK	CÓD 745

Haven

COATING + STITCHING

RED PINK	CÓD 722	RED RED	CÓD 723
MAGENTA PINK	CÓD 724	MAGENTA PURPLE	CÓD 725
TERRACOTTA BLACK	CÓD 720	TERRACOTTA COPPER	CÓD 721
ORANGE BLACK	CÓD 718	ORANGE ORANGE	CÓD 719
YELLOW DARK GRAY	CÓD 730	YELLOW YELLOW	CÓD 731
SNOW OLIVE	CÓD 712	SNOW SAND	CÓD 713
FIELD BLACK	CÓD 714	FIELD OLIVE	CÓD 715
SAVANNAH SAND	CÓD 716	SAVANNAH OLIVE	CÓD 717
TWILIGHT LIGHT GRAY	CÓD 728	TWILIGHT DARK BLUE	CÓD 729
SKY COPPER	CÓD 726	SKY LIGHT BLUE	CÓD 727
SAND COPPER	CÓD 710	SAND SAND	CÓD 711
EARTH SAND	CÓD 732	EARTH DARK GRAY	CÓD 733
CONCRETE LIGTH BLUE	CÓD 708	CONCRETE DARK GRAY	CÓD 709
ASPHALT LIGHT BLUE	CÓD 706	ASFHALT DARK GRAY	CÓD 707
BLACK COPPER	CÓD 704	BLACK BLACK	CÓD 705

CEC - Stilo

COATING + STITCHING

RED BLACK	CÓD 746	RED RED	CÓD 747
WINE PINK	CÓD 748	WINE PURPLE	CÓD 749
BROWN COPPER	CÓD 750	BROWN BLACK	CÓD 751
BEIGE OLIVE	CÓD 752	BEIGE SAND	CÓD 753
FENDI LIGHT GRAY	CÓD 754	FENDI OLIVE	CÓD 755
GREEN LIGHT GRAY	CÓD 756	GREEN BLACK	CÓD 757
BLUE LIGHT BLUE	CÓD 758	BLUE BLACK	CÓD 759
WHITE BLACK	CÓD 760	WHITE LIGHT GRAY	CÓD 761
GRAY LIGHT GRAY	CÓD 762	GRAY BLACK	CÓD 763
BLACK COPPER	CÓD 764	BLACK BLACK	CÓD 765

GRID

COATING + STITCHING

PERSIAN RED PINK	CÓD 813	PERSIAN RED RED	CÓD 814
PITAYA PINK PINK	CÓD 815	PITAYA PINK PURPLE	CÓD 816
MALVA PINK PINK	CÓD 809	MALVA PINK DARK GRAY	CÓD 810
CAMÉLIA PINK PURPLE	CÓD 807	CAMÉLIA PINK PINK	CÓD 808
AMBER ORANGE BLACK	CÓD 817	AMBER ORANGE ORANGE	CÓD 818
SICILIAN YELLOW DARK BLUE	CÓD 819	SICILIAN YELLOW YELLOW	CÓD 820
FOREST GREEN SAND	CÓD 811	FOREST GREEN OLIVA	CÓD 812
CARIBBEAN BLUE PURPLE	CÓD 821	CARIBBEAN BLUE MEDIUM BLUE	CÓD 822
INFINITE BLUE DARK BLUE	CÓD 823	INFINITE BLUE COPPER	CÓD 824
COBALT BLUE LIGHT BLUE	CÓD 825	COBALT BLUE DARK BLUE	CÓD 826
IVORY BEIGE DARK BLUE	CÓD 827	IVORY BEIGE OLIVE	CÓD 828
HAZEL BROWN LIGHT GRAY	CÓD 829	HAZEL BROWN COPPER	CÓD 830
MIST GRAY ORANGE	CÓD 831	MIST GRAY LIGHT GRAY	CÓD 832
TITANIUM GRAY LIGHT GRAY	CÓD 833	TITANIUM GRAY DARK GRAY	CÓD 834

The colors and coatings shown in this catalog are illustrative and should be used for reference only. For more information, see the sample.

Cavaletti®

TECHNICAL DRAWINGS

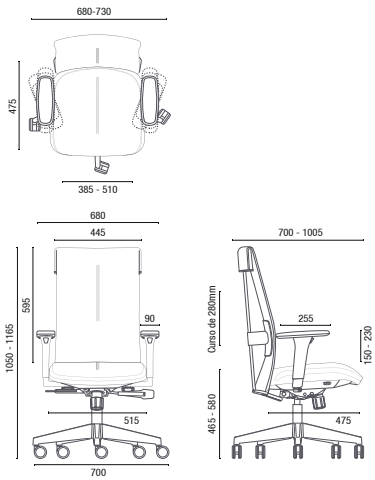

45.101 **Swivel Chair**
4D-CA Armrest
(Aluminum) Twin Base

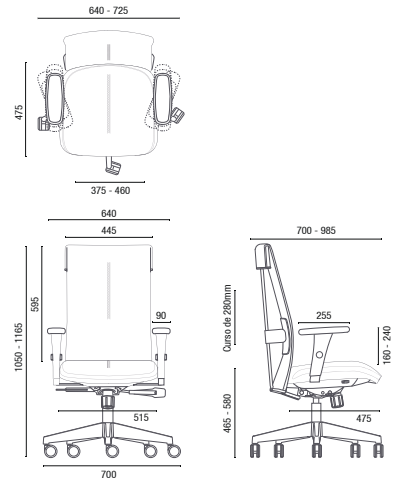

45.101 **Swivel Chair**
3D Armrest
(Aluminum) Twin Base

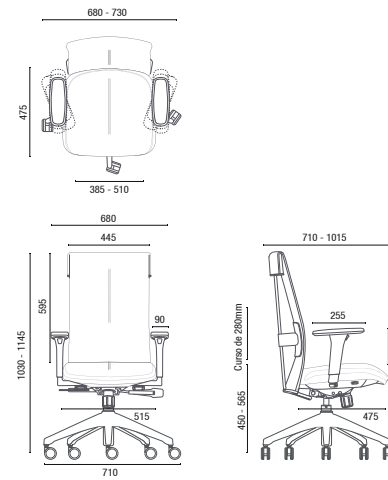

45.101 **Swivel Chair**
4D-CA Armrest
(Nylon) UP Base

NOTE: Extreme measurements obtained without using a load gauge.

Cavaletti S/A Professional Seating
Street Dr. Hiram Sampaio, 550
Erechim/RS Brasil 99.706-461
Fone/Fax: (54) 3520.4100
atendimento@cavaletti.com.br
www.cavaletti.com.br

6 YEARS of WARRANTY Cavaletti

ABNT-ISO9001 ABNT-ISO14001 ABNT-ISO45001 NR17

©Copyright 2021 Cavaletti S/A - All rights reserved. Cavaletti S/A reserves the right to change products at any time and without prior notice. Some items are optional and may not be part of the base product.JUN/2021 V2.

Cavaletti®

PROFESSIONAL SEATING

Cavaletti C4

Cavaletti C4

Advanced ergonomic features and finished with aluminum accents make the Cavaletti C4 an ideal alternative for high-end directive spaces.

ACCESSORIES
Fixed Headrest Option.
Available in Black.

MECHANISM
4-stage Syncron mechanism with seat depth adjustment and automatic tension adjustment, adjusting to the user's weight without the need for manual adjustment.

BACKREST
Backrest in mesh, with upholstered and adjustable Lumbar Support. Apparent structure in Polished Aluminum.

ARMREST
Height-adjustable 3D armrest, front horizontal movement or sideways. *Soft touch* PU support.

BASES
Base options in Aluminum or Nylon, with 65mm castors in Nylon or PU.

SEAT
Seat in injected foam with Depth Adjustment and Gas Height Adjustment. Coatings in Polyester, Grid, Haven, CEC-Stilo, Space, Vinyl and Natural Leather.

29001
Swivel Chair
Syncron
Armrest 3D
Nylon Base

29001 AC
Swivel Chair
Syncron
Armrest 3D
Aluminum Base
Headrest

Cavaletti®

TECHNICAL DRAWINGS

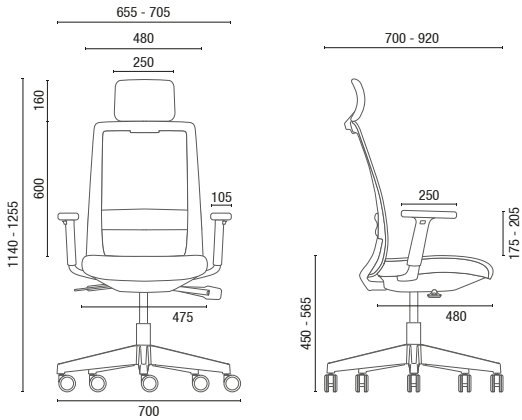

29001 AC **Swivel Chair with Headrest**

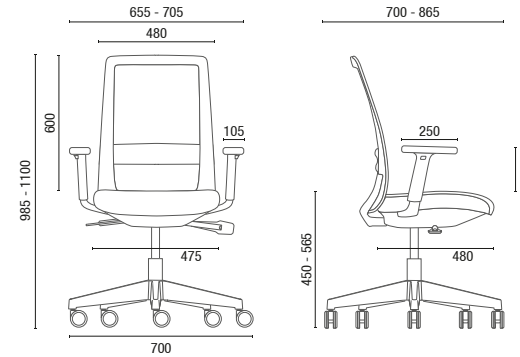

29001 **Swivel Chair**

NOTE: Extreme measurements obtained without using a load gauge.

Cavaletti S/A Professional Seating
Street Dr. Hiram Sampaio, 550
Erechim/RS Brasil 99.706-461
Fone/Fax: (54) 3520.4100
atendimento@cavaletti.com.br
www.cavaletti.com.br

©Copyright 2021 Cavaletti S/A - All rights reserved. Cavaletti S/A reserves the right to change products at any time and without prior notice. Some items are optional and may not be part of the base product.JUN/2021 V2.

Cavaletti®

PROFESSIONAL SEATING

Cavaletti C3

Cavaletti C3

Simplicity and ergonomics. Essential attributes of a chair for demanding workspaces, where high performance is the most important objective.

28001
Swivel Chair
Syncron
4D Armrest
Steel Base with Cover

28001
Swivel Chair
Syncron
4D Armrest
Nylon Base

28001 AC
Swivel Chair
Syncron
4D Armrest
Aluminum Base
Headrest

CHARACTERISTICS

ACCESSORIES
Headrest option with automatic height adjustment and 3D movements allowing better adjustment and accommodation. Available in Black.

MECHANISM
4-stage Syncron mechanism with seat depth adjustment and automatic tension adjustment, adjusting to the user's weight without the need for manual adjustment.

BACKREST
Backrest in black mesh with flexible and adjustable Lumbar Support.

ARMREST
4D arm, adjustable in height, front horizontal movement, lateral and rotating in the horizontal plane. Soft touch PU support.

BASES
Base options in Aluminum or Nylon, with 65mm castors in Nylon or PU. Base in Steel with Cover, only 50mm casters in Nylon or PU.

SEAT
Seat in injected foam with Depth Adjustment and Gas Height Adjustment. Coatings in Polyester, Grid, Haven, CEC-Stilo, Space, Vinyl and Natural Leather.

Cavaletti®

TECHNICAL DRAWINGS

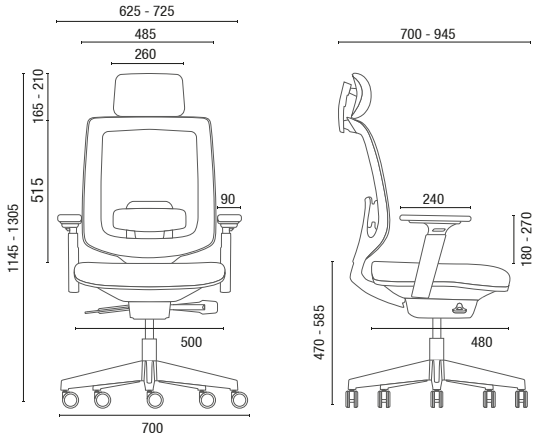

28001 AC **Swivel Chair with Headrest**

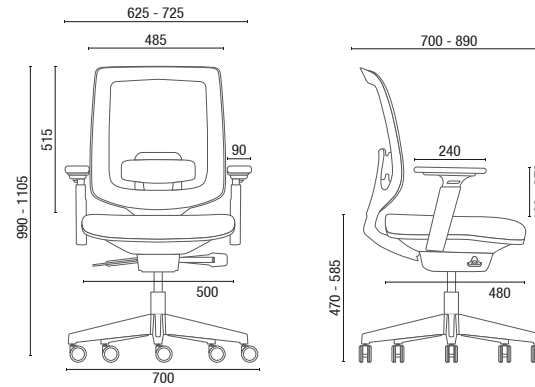

28001 **Swivel Chair**

NOTE: Extreme measurements obtained without using a load gauge.

Cavaletti S/A Professional Seating
Street Dr. Hiram Sampaio, 550
Erechim/RS Brasil 99.706-461
Fone/Fax: (54) 3520.4100
atendimento@cavaletti.com.br
www.cavaletti.com.br

Cavaletti® PROFESSIONAL SEATING

6 YEARS of WARRANTY Cavaletti

ABNT-ISO9001 ABNT-ISO14001 ABNT-ISO45001 NR17

©Copyright 2021 Cavaletti S/A - All rights reserved. Cavaletti S/A reserves the right to change products at any time and without prior notice. Some items are optional and may not be part of the base product.JUN/2021 V2.

Cavaletti®

PROFESSIONAL SEATING

Cavaletti Way

Cavaletti Way

The Cavaletti Way line offers a design inspired by slender, elegant silhouettes and a striking personality. Features three backrest height options to suit all types of directive spaces.

BACKREST
Backrest 185 mm higher. Internal support in mesh for all models.

HEADREST
Better support for the cervical region (model 19001 L).

ADJUSTABLE ARMS
Adjustable Arms SL, SL New PU, SL New PP (all with option of Side Adjustment) or 3D (adjustable in height, advance and angle of the PU support).

DETAILS
Sewing with exclusive design.

MECHANISM
4-stage Syncron Mechanism with front maniple tension adjustment (with seat depth adjustment option).

BASES
Base options in Aluminum or Nylon, with 65mm castors in Nylon or PU. Base in Steel with Cover, only 50mm casters in Nylon or PU.

STRUCTURES
Fixed swing frame with integrated arms (SI). Finishing in Universal Black or Chrome paint.

CONFIGURATIONS

19001 L
Swivel Highback
Syncron
3D Arms
Aluminum Base
Head Support

19001
Swivel Midback
Syncron
SL New PU Arms
Aluminum Base

19002
Swivel Lowback
Syncron
3D Arms
Aluminum Base

19006 SI
Visitor
SI Structure
Integrated Arms

Cavaletti®

TECNICAL DRAWINGS

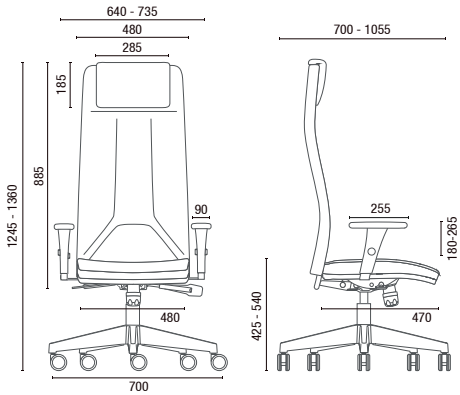

19001 L **Swivel Highback**

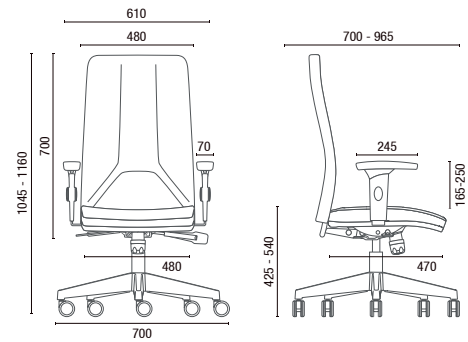

19001 **Swivel Midback**

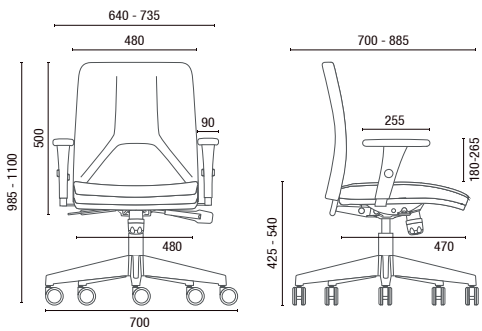

19002 **Swivel Lowback**

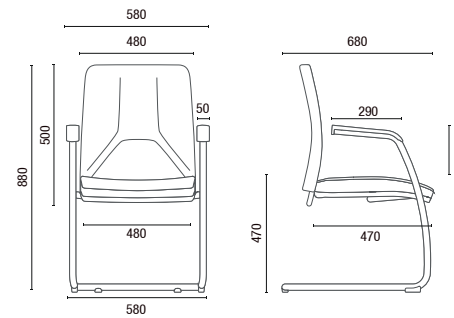

19006 SI **Visitor**

NOTE: Extreme measurements obtained without using a load gauge.

Cavaletti S/A Professional Seating
Street Dr. Hiram Sampaio, 550
Erechim/RS Brasil 99.706-461
Fone/Fax: (54) 3520.4100
atendimento@cavaletti.com.br
www.cavaletti.com.br

Cavaletti®
PROFESSIONAL SEATING

6 YEARS of WARRANTY Cavaletti

Look for FSC® certified products
FSC www.fsc.org FSC® C130850
The mark of responsible forestry

ABNT-ISO9001 ABNT-ISO14001 ABNT-ISO45001 NR17

©Copyright 2021 Cavaletti S/A - All rights reserved. Cavaletti S/A reserves the right to change products at any time and without prior notice. Some items are optional and may not be part of the base product.JUN/2021 V2.

Cavaletti®

PROFESSIONAL SEATING

Cavaletti Essence

Cavaletti Essence

In a directive space, it is essential to bring together in a single product, refined finishes, generous dimensions and ergonomic adjustments to ensure ample comfort in all the decisions of the day.

CHARACTERISTICS

BACKREST
Backrest with 750mm on the Highback model.

COATINGS
Available in CEC - Stilo or 100% Natural Leather.

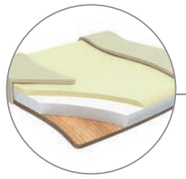

COMFORT
Seat with two foam densities, distributed according to support area.

BASES
Base options in Aluminum or Nylon, with 65mm castors in Nylon or PU.

MECHANISM
3-stage Syncron mechanism with tension regulation by front handle.

ARMREST
Exclusive armrest, fixed in Aluminum or 4D in PU Soft Touch (adjustment in height, depth, lateral spacing and support rotation).

SEAT
Seat with Depth Adjustment and Gas Height Adjustment.

STRUCTURE
Fixed base with front casters for better movement. Chrome or Black Universal Finish.

CONFIGURATIONS

20.501
Swivel Highback
Syncron RP
Fixed Aluminum Armrest
Aluminum Base

20.502
Swivel Midback
Syncron RP
Fixed Aluminum Armrest
Aluminum Base

20.506 S
Visitor
Structures with front castors
Fixed Aluminum Armrest

Mobility
Front castors

20.501
Swivel Highback
Syncron RP
4D Armrest
Nylon Base

20.502
Swivel Midback
Syncron RP
4D Armrest
Nylon Base

20.506 S
Visitor Chair
Structure with front castors
4D Armrest

COATINGS

Natural Leather

Black

White

Brown

Caramel

CEC - Stilo

Black

Gray

White

Beige

Fendi

Red

Wine

Brown

Green

Blue

Cavaletti®

TECHNICAL DRAWINGS

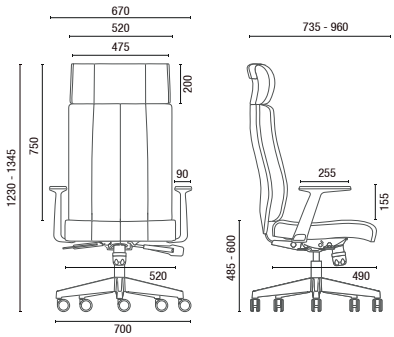

20.501 **Swivel Highback**
Fixed Aluminum Armrest

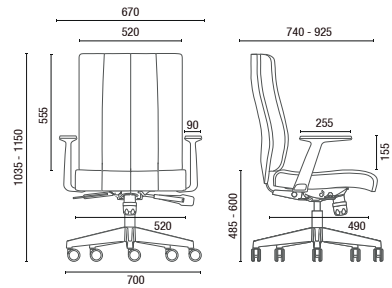

20.502 **Swivel Midback**
Fixed Aluminum Armrest

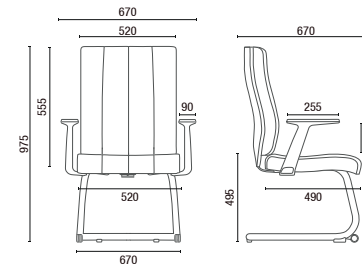

20.506 S **Visitor Chair**
Fixed Aluminum Armrest

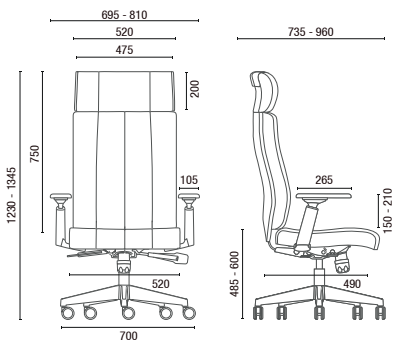

20.501 **Swivel Highback**
4D Armrest

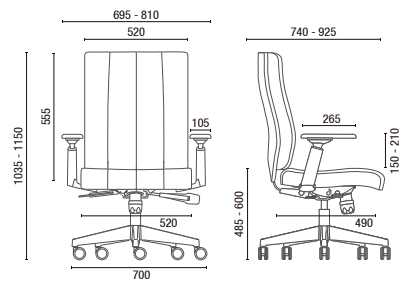

20.502 **Swivel Midback**
4D Armrest

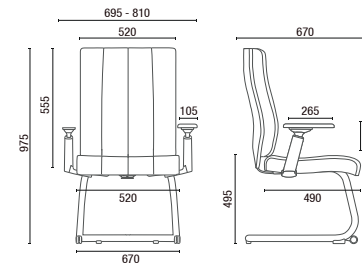

20.506 S **Visitor Chair**
4D Armrest

NOTE: Extreme measurements obtained without using a load gauge.

Cavaletti®
PROFESSIONAL SEATING

Cavaletti S/A Professional Seating
Street Dr. Hiram Sampaio, 550
Erechim/RS Brasil 99.706-461
Fone/Fax: (54) 3520.4100
atendimento@cavaletti.com.br
www.cavaletti.com.br

6 YEARS of WARRANTY Cavaletti

ABNT-ISO9001 ABNT-ISO14001 ABNT-ISO45001 NR17

©Copyright 2021 Cavaletti S/A - All rights reserved. Cavaletti S/A reserves the right to change products at any time and without prior notice. Some items are optional and may not be part of the base product. JUN/2021 V2.

Cavaletti®

PROFESSIONAL SEATING

Cavaletti Prime
Cavaletti Master

CHARACTERISTICS

COATING
Models with black Natural Leather coating.

MECHANISM
5-stage eccentric syncron mechanism with adjustment of tension by front maniple.

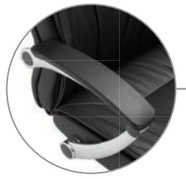

ARMREST
Aluminum Articulated Arms with PU support.

BASES
Aluminum base with exclusive design.
60mm PU castors.

PRIME 20200

SEAT
In multidensity foam, with Gas Height Adjustment;

STRUCTURE
Fixed structure in Balance option (S) with Chrome finish.

PRIME 20100
MASTER 20000

COATINGS
Coatings in CEC-Stilo, Vinyl and Black Natural Leather. Sewing options depending on the model (20000 or 20100).

MECHANISM
Relax mechanism with locking system in working position or free floating, with tension regulation by front maniple.

ARMREST
Fixed Arm Chrome with PP finish.

BASES
Stamped, Aluminum and Elliptical Bases Options (finish chrome plated), with 50mm castors in Nylon or PU.

Cavaletti Prime

To be Prime is to be entitled to the best. For this reason, the seats for directive areas of the Prime line are carefully produced to the details, using noble materials and exquisite construction.

CONFIGURATIONS

PRIME 20200

20201
Swivel Chair
Eccentric Syncron
Articulable Arms
Aluminum Base

20202
Swivel Chair
Eccentric Syncron
Articulable Arms
Aluminum Base

20206 S
Visitor Chair
S Structure
Articulable Arms

PRIME 20100

20101
Swivel Chair
Relax
Fixed Arms
Stamped Base

20102
Swivel Chair
Relax
Fixed Arms
Stamped Base

20103
Extra Swivel Chair
Relax
Fixed Arms
Stamped Base

20106 S
Visitor Chair
S Structure
Fixed Arms

MASTER 20000

20001
Swivel Chair
Relax
Aluminum Base

20002
Swivel Chair
Relax
Estamped Base

20006 S
Visitor Chair
Balance Structure (S)

Cavaletti®

TECHNICAL DRAWINGS

PRIME 20200

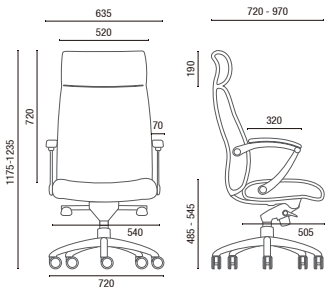

20201
Swivel Chair

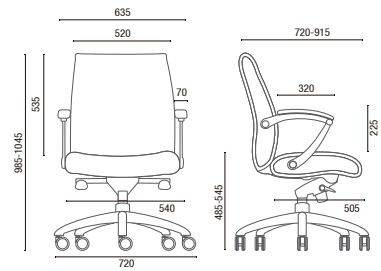

20202
Swivel Chair

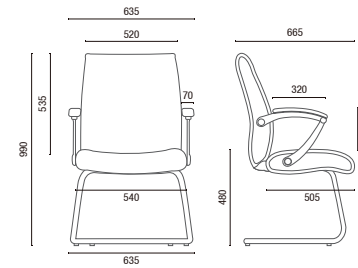

20206
Visitor Chair

PRIME 20100

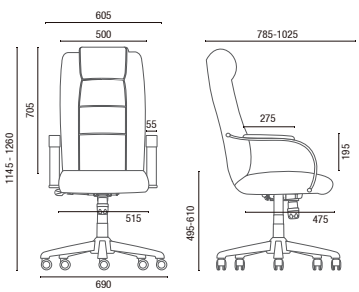

20101
Swivel Chair

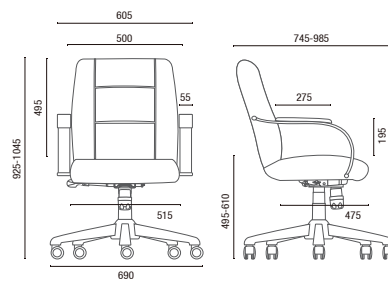

20102
Swivel Chair

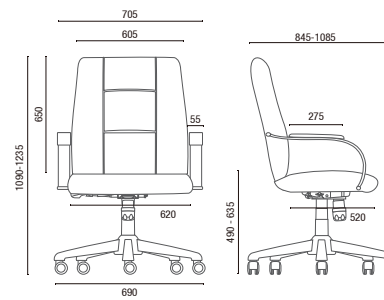

20103
Extra Swivel Chair

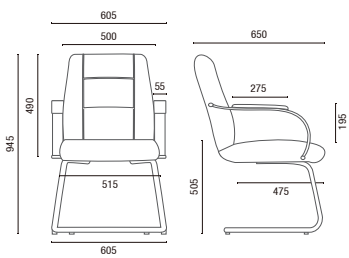

20106 S
Visitor Chair

MASTER 20000

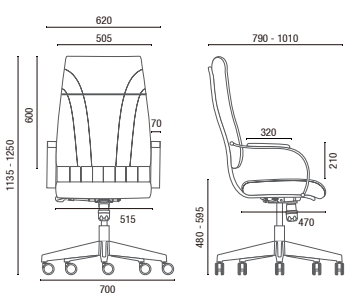

20001
Swivel Chair

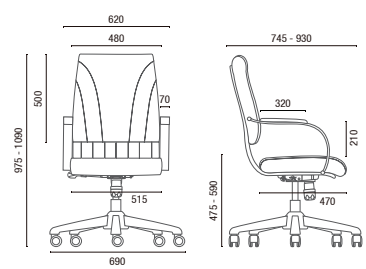

20002
Swivel Chair

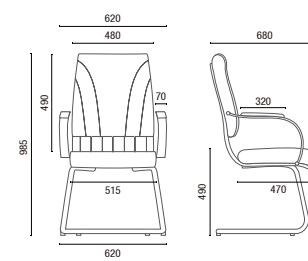

20006 S
Visitor Chair

NOTE: Extreme measurements obtained without using a load gauge.

Cavaletti®
PROFESSIONAL SEATING

Cavaletti S/A Professional Seating
Street Dr. Hiram Sampaio, 550
Erechim/RS Brasil 99.706-461
Fone/Fax: (54) 3520.4100
atendimento@cavaletti.com.br
www.cavaletti.com.br

6 YEARS of WARRANTY Cavaletti

ABNT-ISO9001 ABNT-ISO14001 ABNT-ISO45001 NR17

©Copyright 2021 Cavaletti S/A - All rights reserved. Cavaletti S/A reserves the right to change products at any time and without prior notice. Some items are optional and may not be part of the base product.JUN/2021 V2.

Cavaletti®

PROFESSIONAL SEATING

Cavaletti Chroma

Cavaletti Chroma

The Chroma line features 100% natural leather beauty associated with the lightness of chrome through a design classic and timeless.

COATINGS
100% Natural Leather Coating with four color options.

MECHANISM
Relax mechanism with locking system in working position or free floating, with tension regulation by front handle.

SEAT
Seat with protection at the bottom, preventing the leather stay marked. Gas Height Adjustment.

ARMRESTS
Arms integrated to the structure, which provide greater strength constructive and durability.

BASES
Options for Stamped or Elliptical Bases (chrome finish), with 50mm castors in Nylon or PU. Aluminum Base with 65mm castors in Nylon or PU.

STRUCTURE
Fixed Swing Structure (S) with Chrome finish.

CONFIGURATIONS

14001
President Swivel
Relax Mechanism
Integrated Arms
Elliptical Base

14001
Swivel
Relax Mechanism
Integrated Arms
Stamped Base

14004
Swivel
Fixed Mechanism
Integrated Arms
Elliptical Base

14007 S
Visitor
"S" Type Atructure
Integrated Arms

COLORS

The Chroma line offers 100% Natural Leather coating with four color options: Brown, Beige, Black and White.

958
Brown

977
Beige

991
Black

995
White

Cavaletti®

TECHNICAL DRAWINGS

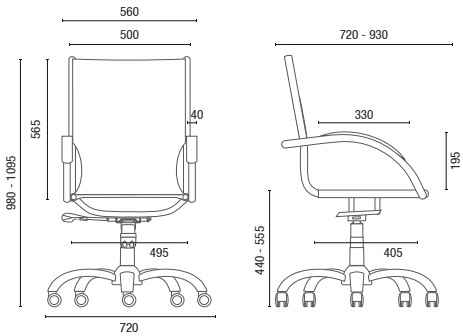

14001 **Swivel**
Eliptical Base

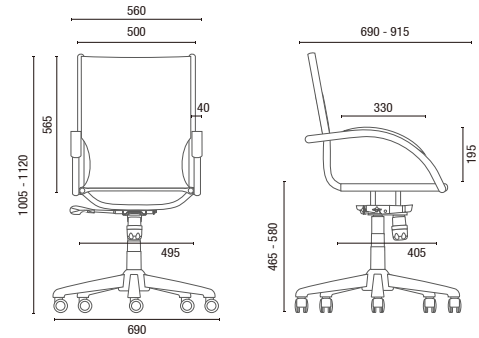

14001 **Swivel**
Stamped Base

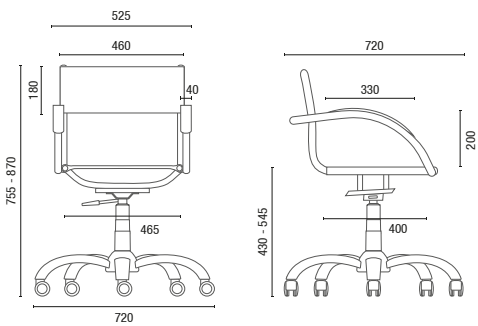

14004 **Swivel**
Eliptical Base

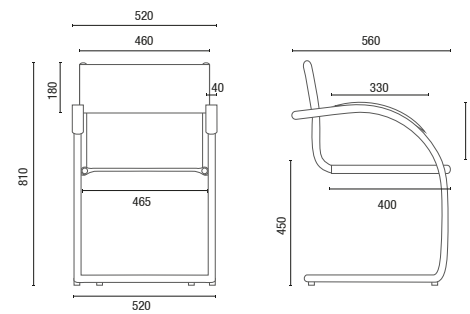

14007 S **Visitor**

NOTE: Extreme measurements obtained without using a load gauge.

Cavaletti S/A Professional Seating
Street Dr. Hiram Sampaio, 550
Erechim/RS Brasil 99.706-461
Fone/Fax: (54) 3520.4100
atendimento@cavaletti.com.br
www.cavaletti.com.br

6 YEARS of WARRANTY Cavaletti
ABNT-ISO9001 ABNT-ISO14001 ABNT-ISO45001 NR17

©Copyright 2021 Cavaletti S/A - All rights reserved. Cavaletti S/A reserves the right to change products at any time and without prior notice. Some items are optional and may not be part of the base product.JUN/2021 V2.

Cavaletti®

PROFESSIONAL SEATING

Cavaletti Coffee

Cavaletti Coffee

For meeting and social environments – from cafes, restaurants, waiting rooms to use as an approach chair – Cavaletti Coffee stands out for its quality of finish combined with its versatility of application.

CHARACTERISTICS

Shapes that invites

With smooth curves and simple shapes, Cavaletti Coffee's design composes shared environments in a practical and inviting way, especially when associated with the tables of the line.

Lightness and resistance

Attractively combined, the solid wood structure and the engineered polymer seat and back, bring lightness and resistance to Cavaletti Coffee. Also ensuring easy cleaning in high-turnover locations.

CONFIGURATIONS

25.006
Visitor
European Beech Wood Base

25.006
Visitor
European Beech Wood Base

25.101
Square Top Table
Melamine Top
Metal Base

25.102
Round Top Table
Melamine Top
Metal Base

39.801
Side Table
Melamine Top
Metal Base

39.802
Side Table
Melamine Top
Metal Base

39.803
Side Table
Melamine Top
Metal Base

DETAILS

Structure insolid wood (European Beech)

Inviting shapes and easy composition in any space

Engineering polymer contact surfaces

High strength with load capacity of up to 160kg

SURFACES

White Engineering Polymer

Black Engineering Polymer

TABLE TOPS

White (01)

Gray (02)

Black (05)

Swiss Elm (24)

Oak Hanover (27)

Oak Munich (28)

TABLE BASES

Universal (101) Black

Silver (13) Semi Matte

Graphite (80) Ultra Matte

Red (85) Ultra Matte

Tile (84) Ultra Matte

Soft Pink (100) Ultra Matte

Yellow (86) Ultra Matte

Sand (83) Ultra Matte

Olive (82) Ultra Matte

Blue (81) Ultra Matte

White (79) Ultra Matte

Cavaletti®

TECHNICAL DRAWINGS

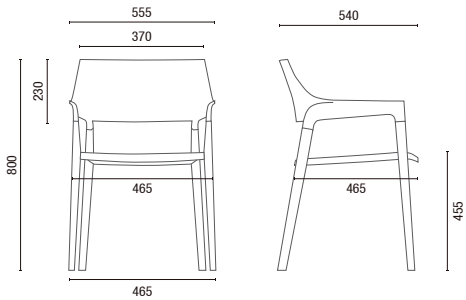

25.006 **Visitor**

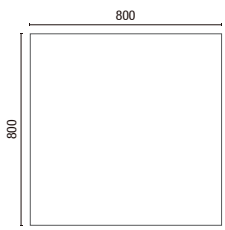

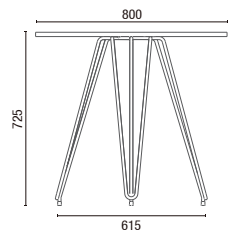

25.101 **Square Top Table**

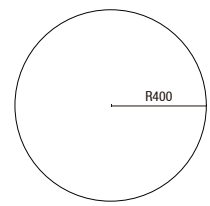

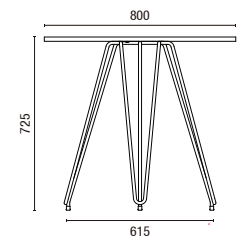

25.102 **Round Top Table**

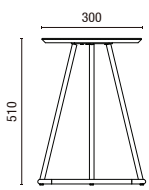

39.801 **Side Table**

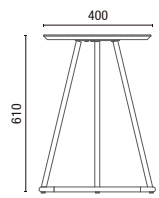

39.802 **Side Table**

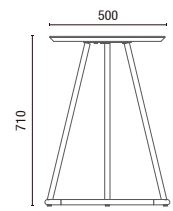

39.803 **Side Table**

NOTE: Extreme measurements obtained without using a load gauge. To specify colors and finishes, always use original physical samples from Cavaletti.

Cavaletti S/A Professional Seating
Street Dr. Hiram Sampaio, 550
Erechim/RS Brasil 99.706-461
Fone/Fax: (54) 3520.4100
atendimento@cavaletti.com.br
www.cavaletti.com.br

6 YEARS of WARRANTY Cavaletti
ABNT-ISO9001 ABNT-ISO14001 ABNT-ISO45001 NR17

R4DESIGN

©Copyright 2021 Cavaletti S/A - All rights reserved. Cavaletti S/A reserves the right to change products at any time and without prior notice. Some items are optional and may not be part of the base product.JUN/2021 V2.

Cavaletti®

PROFESSIONAL SEATING

Cavaletti Joy

Cavaletti Joy

Light. Simple. Uncomplicated.
Cavaletti Joy offers the simplicity of a design without excesses, combined with the practicality of a color palette exclusive. Compact and functional, it's a smart way to make all kinds of more attractive and laid-back collective environment.

CHARACTERISTICS

There are times when everything
what we need is to uncomplicate it.

HANDLE
Smart design, allows
practicality in handling.

CLICKS
No screws.
The mounting system is
all by click.

PROTECTION
Support for stacking with
TPE stickers.

STACKING
Stackable up to 10 units.

COMPOSITIONS

41.008
Off White
Off White Plastics 44
Base White Ultra Matte
Chrome Base Option

41.008
Gray
Gray Plastics 41
Silver Base
Chrome Base Option

41.008
Graphite
Graphite Plastics 45
Ultra Matte Graphite Base
Chrome Base Option

41.008
Black
Black Plastics 06
Universal Black Base
Chrome Base Option

41.008
Blue
Night Blue Plastics 32
Ultra Matte Blue Base
Chrome Base Option

41.008
Olive
Olive Plastic 76
Ultra Matte Olive Base
Chrome Base Option

41.008
Sand
Sand Plastics 77
Ultra Matte Sand Base
Chrome Base Option

41.008
Tile
Tile Plastics 78
Ultra Matte Tile Base
Chrome Base Option

41.008
Yellow
Yellow Plastics 16
Ultra Matte Yellow Base
Chrome Base Option

41.008
Red
Red Apple Plastics 43
Ultra Matte Red Base
Chrome Base Option

Trolley
Maximum stacking: 10 units

Cavaletti®

TECHNICAL DRAWINGS

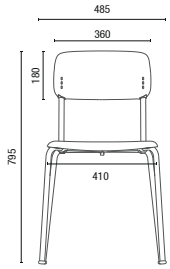

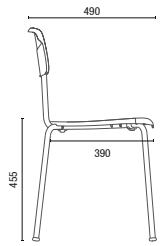

41.008 **Visitor Chair**

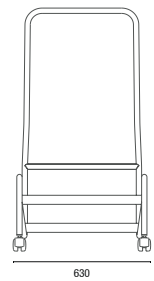

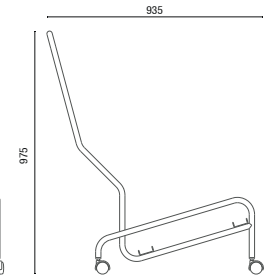

Joy Trolley

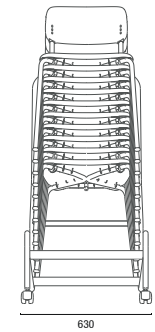

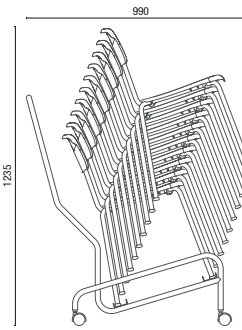

Joy Trolley
Maximum stacking: 10 units

NOTE: Extreme measurements obtained without using a load gauge.

STRUCTURES

PLASTICS	Universal Black (101)	Semi Matte Silver (13)	Chrome (05)	Ultra Matte Graphite (80)	Ultra Matte Red (85)	Ultra Matte Tile (84)	Ultra Matte Yellow (86)	Ultra Matte Sand (83)	Ultra Matte Olive (82)	Ultra Matte Blue (81)	Ultra Matte White (79)	Ultra Matte Soft Pink (100)
Black 06	●	●	●									
Graphite 45	●	●	●	●								
Red Apple 43	●	●	●		●							
Tile 78	●	●	●			●						
Yellow 16	●	●	●				●					
Sand 77	●	●	●					●				●
Olive 76	●	●	●						●			
Night Blue 32	●	●	●							●		
Gray 41	●	●	●									
Off White 44	●	●	●								●	

Cavaletti S/A Professional Seating
Street Dr. Hiram Sampaio, 550
Erechim/RS Brasil 99.706-461
Fone/Fax: (54) 3520.4100
atendimento@cavaletti.com.br
www.cavaletti.com.br

6 YEARS of WARRANTY Cavaletti

ABNT-ISO9001 ABNT-ISO14001 ABNT-ISO45001 NR17

R4DESIGN

©Copyright 2021 Cavaletti S/A - All rights reserved. Cavaletti S/A reserves the right to change products at any time and without prior notice. Some items are optional and may not be part of the base product.JUN/2021 V2.

Cavaletti®

PROFESSIONAL SEATING

Cavaletti Go

Cavaletti Go

The Go line was created to offer fl exibility – both aesthetic and functional – for contemporary environments. Thus, the original concept unfolds in multiple configurations to meet the needs of each use – Can be in a meeting room, a cafe, a waiting space or even a home office.

The result is a pure design, with precise and iconic lines, which can be complemented with accessories for progressive levels of comfort according to the time of use. The complements allow you to modify the product's aesthetics and adapt it to the identity of each space.

iF product design award 2013

CHARACTERISTICS

VERSATILE ARMS
Integrated into the product design, allowing for stacking.

STACKING PROTECTION
Injected counter seat for protection during stacking.

SMART UPHOLSTERY
Allows the addition of upholstery independently on the seat and backrest, increasing the comfort level progressively. Available in two thickness options: 7mm or 25mm.

STACKING CAPACITY
Stacking up to 15 chairs (on trolley for transport).
Stacking up to 6 chairs (outside the trolley).

*Trolley for optional transport.

COLORS AND FINISHES

SEWINGS

Smooth

Diamond

Aleatory

Custom Embroidery

PLASTICS

06 **Black**
45 **Graphite**
41 **Gray**
44 **Off White**
42 **Blue Marine**
40 **Lime Green**
43 **Apple Red**
33 **Orange**

STRUCTURES

Chrome (05) **Universal Black (101)** **Semi Matte Silver (13)** **Bright Gray (12)** **Ultra Matte Graphite (80)** **Ultra Matte White (79)** **Ultra Matte Red (85)** **Ultra Matte Tile (84)** **Ultra Matte Yellow (86)** **Ultra Matte Sand (83)** **Ultra Matte Olive (82)** **Ultra Matte Blue (81)** **Ultra Matte Soft Pink (100)**

CONFIGURATIONS

	GO BASIC Optional Armrests	GO SOFT Optional Armrests Upholstered Seat	GO COMPLETE Optional Armrests Upholstered Seat and Backrest
34003 **Swivel**			
34006 **Visitor**			
34020 **High Stool**			

SPECIAL MODELS
Special models available in Basic, Soft and Complete versions.

34006 P
Visitor
4 Feet Structure
Optional Armrests

34006 P ROD
Visitor
4 Feet Structure with Castors
Optional Armrests

34006
Clipboard
Fixed (U), Removable (UR) Options and Retractable (UE)

34010
Bench
Optional Armrests
Back glides with adjustment
Available in 2, 3, 4 or 5 Seats.

Cavaletti®

TECHNICAL DRAWINGS

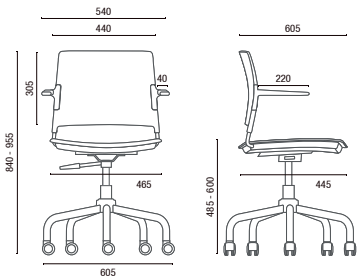

34003 **Swivel**

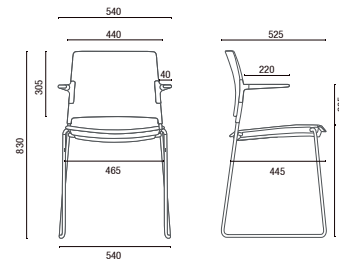

34006 **Visitor**

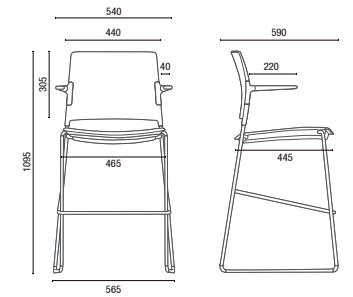

34020 **High Stool**

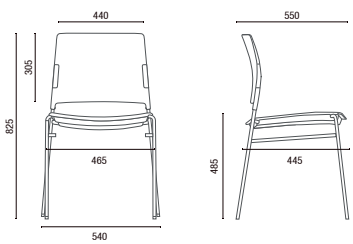

34006 P **Visitor**

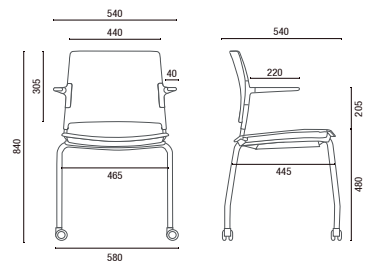

34006 P ROD **Visitor with Castors**

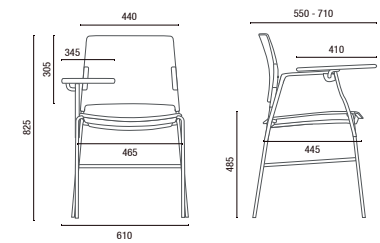

34006 U **Clipboard**

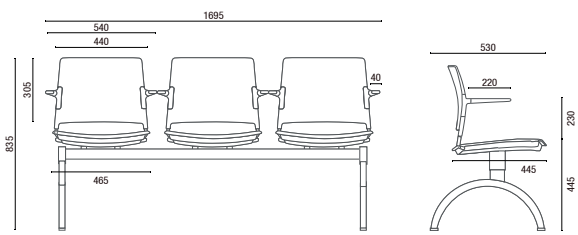

34010 **Bench**
Width with Armrest:
2 Seats – 1110mm
3 Seats – 1695mm
4 Seats – 2270mm
5 Seats – 2860mm

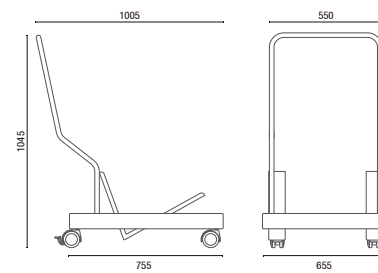

Trolley
Maximum stacking: 15 units

NOTE: Extreme measurements obtained without using a load gauge.

Cavaletti S/A Professional Seating
Street Dr. Hiram Sampaio, 550
Erechim/RS Brasil 99.706-461
Fone/Fax: (54) 3520.4100
atendimento@cavaletti.com.br
www.cavaletti.com.br

©Copyright 2021 Cavaletti S/A - All rights reserved. Cavaletti S/A reserves the right to change products at any time and without prior notice. Some items are optional and may not be part of the base product.JUN/2021 V2.

Cavaletti®

PROFESSIONAL SEATING

Cavaletti Stay

Cavaletti Stay

People's relationship with time has changed...

Connectivity has transformed the way we live, work, relax.

Today, every place can be a productive environment: a waiting room, a cafe, a library.

And this change calls for chairs suitable for this new behavior.

Stay The line offers optimal comfort for all the moments.

CONFIGURATIONS

33106 P
Stackable Visitor
4 Feet Structure
Integrated Arms
Maximum stacking: 04 units

33107 A
Visitor
Arch Structure
Integrated Arms

33108
Swivel
Integrated Arms

33206
Visitor
Varnished Wooden Feet
*Upholstered Seat Option

33120
High Stool
4 feet Structure
Integrated Arms

33110
Bench
Integrated Arms

COLORS

CÓD. 02	CÓD. 41	CÓD. 46	CÓD. 06	CÓD. 42	CÓD. 40	CÓD. 38	CÓD. 33
White	**Gray**	**Brown coffee**	**Black**	**Blue Marine**	**Lime Green**	**Cherry Red**	**Orange**

Structure with Chrome finish, Universal Black paint or White (model 33108).

TECHNICAL DRAWINGS

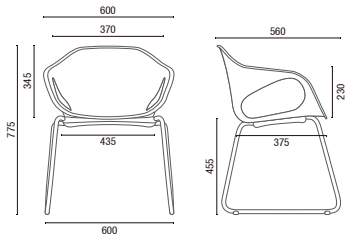

33107 A **Visitor**

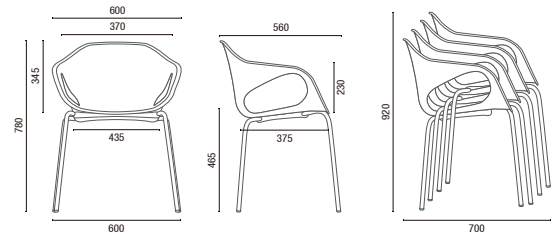

33106 P **Visitor stackable**
Maximum stacking: 04 units

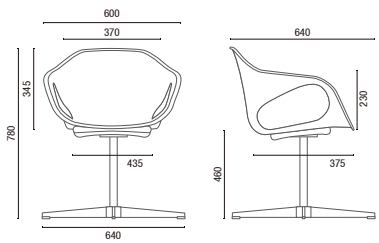

33108 **Swivel**

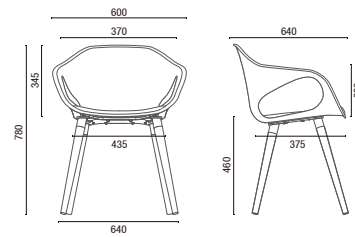

33206 **Visitor**

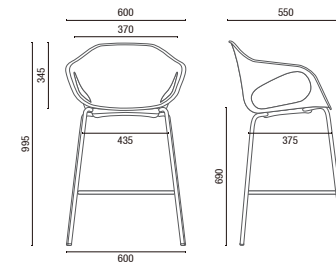

33120 **High stool**

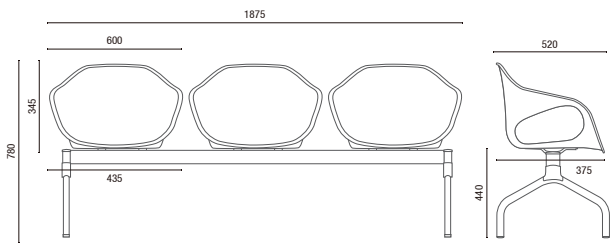

33110 **Bench**
Widht:
2 Seats – 1230mm
3 Seats – 1845mm
4 Seats – 2470mm
5 Seats – 3090mm

©Copyright 2021 Cavaletti S/A - All rights reserved. Cavaletti S/A reserves the right to change products at any time and without prior notice. Some items are optional and may not be part of the base product.JUN/2021 V2.

Cavaletti®
PROFESSIONAL SEATING

Cavaletti S/A Professional Seating
Street Dr. Hiram Sampaio, 550
Erechim/RS Brasil 99.706-461
Fone/Fax: (54) 3520.4100
atendimento@cavaletti.com.br
www.cavaletti.com.br

6 YEARS of WARRANTY Cavaletti

ABNT-ISO9001 ABNT-ISO14001 ABNT-ISO45001 NR17

Cavaletti®

PROFESSIONAL SEATING

Cavaletti Viva

Cavaletti Viva

Inspired by nature, the Viva line brings exclusive tones to be combined with different configurations, adapting to any environment. In addition to the variety of colors, the products feature a Cavaletti design, which is exclusive and more ergonomic.

Enjoy, imagine, create. Viva!

VERSIONS

VIVA

The models of the Viva line have a handgrip, which facilitates handling and transport. Available in fifteen different shades.

VIVA SPM

The Viva SPM version brings the Viva chair without the handgrip in four color options: Blue, Red, White and Black. Available for all configurations.

Cavaletti
original
Design

Learning environments designed to inspire. The Viva chair with 360º clipboard allows easy access and mobility, as it can be used on the left or right side, in a longitudinal, horizontal or inclined position. Ideal for layout readjustments, to promote interaction between participants in learning activities in an active way and in groups, with a unique color palette to personify collective environments.

35004 **Clipboard 360°**

COLORS

VIVA

27 **Green Lemon**	28 **Green**	30 **Navy Blue**	34 **Blue**	31 **Red**
33 **Orange**	16 **Yellow**	02 **White**	12 **Gray**	06 **Black**

VIVA SPM

34 **Blue**	31 **Red**	02 **White**	06 **Black**

Available in custom color for orders starting from 500 units.

STRUCTURES

101 **Universal Black**	13 **Semi Matte Silver**	05 **Chrome**	80 **Ultra Matte Graphite**	79 **Ultra Matte White**
85 **Ultra Matte Red**	84 **Ultra Matte Tile**	86 **Ultra Matte Yellow**	83 **Ultra Matte Sand**	82 **Ultra Matte Olive**	81 **Ultra Matte Blue**

Finishes, tips and the center of the bench will always be black.

CONFIGURATIONS

35008 P
Stackable Visitor Chair
4 Feet Structure

35008 P
Stackable Visitor Chair
Maximum Stacking: 10 units

35007 P
Visitor Chair
4 Feet Structure

35007 SE
Visitor Chair
Balance Structure
Upholstered Seat
Available with Plastic Seat
without Upholstery

35008 A
Stackable Visitor Chair
Arch Structure
Maximum Stacking: 05 units

35004
Swivel
Z Armrest
Viva Base
Flange Mechanism

35004 SL
Swivel
SL Armrest
Steel Base with Cover
Flange Mechanism

35004
Swivel
Clipboard 360°
Viva Base
Flange Mechanism

35007 Z
Visitor Chair
Integrated Armrest

35007 Z ROD
Visitor Chair with Casters
Integrated Armrest

35010
Bench

35008 PU
Visitor Chair
4 Feet Structure with Grid
Removable Clipboard

Union Mechanism
35007 Z Models

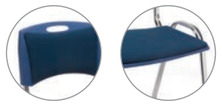

Upholstery
Upholstered seat and/or backrest
option. Available for all models.

35008 PUE
Visitor Chair
Retractable Clipboard

Cavaletti®

TECHNICAL DRAWINGS

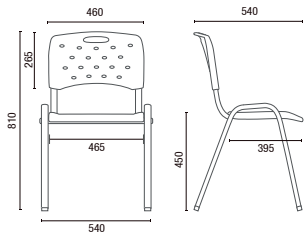

35008 P **Stackable Visitor Chair**

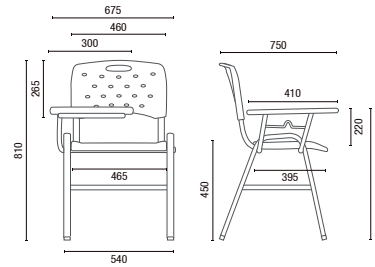

35008 PU **Visitor Chair**

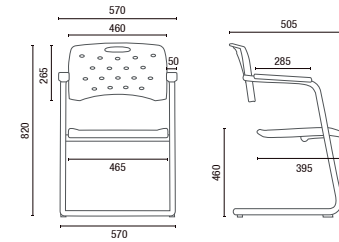

35007 S **Visitor Chair**

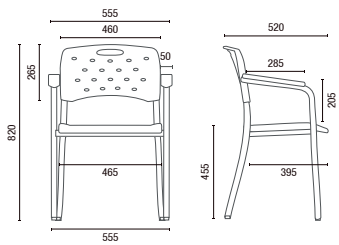

35007 P **Visitor Chair**

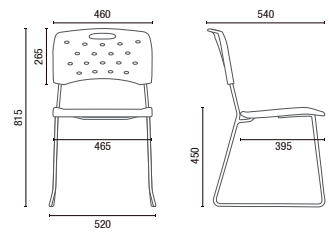

35008 A **Stackable Visitor Chair**

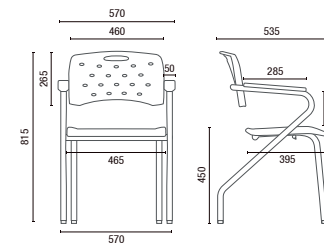

35007 Z **Visitor Chair**

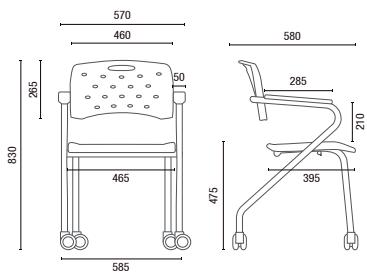

35007 Z ROD **Visitor Chair with Casters**

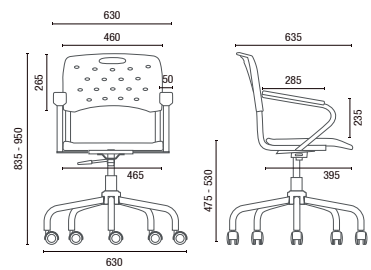

35004 **Swivel with Viva Base**

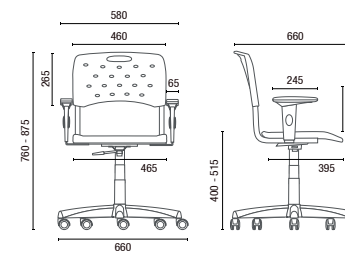

35004 **Swivel with Steel with Cover Base**

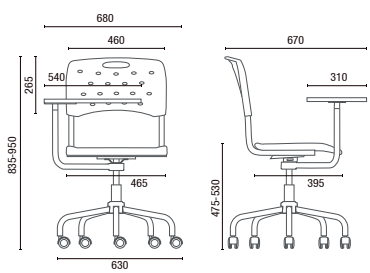

35004 **Swivel with Clipboard 360°**

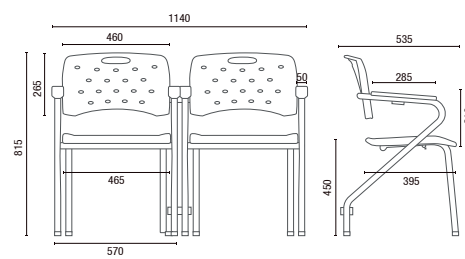

35007 Z **Visitor Chair with Union Mechanism**

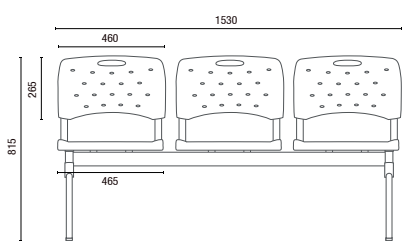

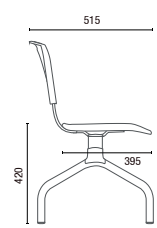

35010 **Bench**
Widths without Armrest:
2 Seats - 1025mm 3 Seats - 1530mm 4 Seats - 2050mm 5 Seats - 2575mm

NOTE: Extreme measurements obtained without using a load gauge.

Cavaletti®
PROFESSIONAL SEATING

Cavaletti S/A Professional Seating
Street Dr. Hiram Sampaio, 550
Erechim/RS Brasil 99.706-461
Fone/Fax: (54) 3520.4100
atendimento@cavaletti.com.br
www.cavaletti.com.br

6 YEARS of WARRANTY Cavaletti

ABNT-ISO9001 ABNT-ISO14001 ABNT-ISO45001 NR17

QUALIDADE-ABNT-AMBIENTAL PE-165

*Certified Products with Ecological Label (Quality - ABNT - Environmental) or ABNT NBR 13962 Standard, under consultation with the Commercial Department - Public Sector.

©Copyright 2021 Cavaletti S/A - All rights reserved. Cavaletti S/A reserves the right to change products at any time and without prior notice. Some items are optional and may not be part of the base product.JUN/2021 V2.

Cavaletti®

PROFESSIONAL SEATING

Cavaletti Solo

Cavaletti Solo

In individual moments of connection, contemplation and decompression, Cavaletti Solo contemporary design invites you for a comfort experience between the activities of the day.

NOTE: Products in this image in Liv Arenito 500 and Basalt 513. Cover products in Natural Leather Caramel 259.

CHARACTERISTICS

The reinvention of the break

With a high back and welcoming shapes, Cavaletti Solo encourages a change in posture and makes breaks much more inspiring, especially when combined with Ottoman.

NOTE: Products in this image in Haven Sand 560 and Natural Leather Caramel 259.

One product, several moods

Available in swivel or fixed versions, Cavaletti Solo bases feature 12 color options, which combined with more than 80 coatings, adapt to different styles of environment.

NOTE: Products in this image in Grid Beige Ivory 360, Haven Field 556 and Savannah 557.

CONFIGURATIONS

36.101
Swivel Armchair
Polished Aluminum Base

36.102
Swivel Ottoman
Polished Aluminum Base

36.111
Fixed Armchair
Steel Frame Base

36.112
Fixed Ottoman
Steel Frame Base

36.113
Side Table
Steel Frame Base

36.114
Side Table
Steel Frame Base

36.115
Side Table
Steel Frame Base

NOTE: In these images, Solo and Ottoman in Politex Gray Metal 402 and Side Tables with top in MDF Swiss Elm.

DETAILS

Handmade finish

Aluminum swivel base, polished or powder coated

Ottoman with leather top option

More than 80 finishing options

COATINGS

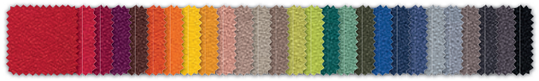

Polyester
27 colors

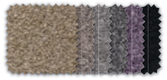

Politex
06 colors

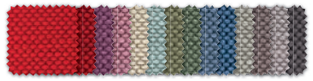

Liv
14 colors

Haven
15 colors

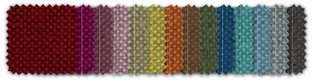

Grid
14 colors

CEC - Stilo
10 colors

Natural Leather
02 colors

STRUCTURES

Polished Aluminum | Universal Black (101) | Semi Matte Silver (13) | Ultra Matte Graphite (80) | Ultra Matte Red (85) | Ultra Matte Tile (84) | Ultra Matte Yellow (86) | Ultra Matte Sand (83) | Ultra Matte Olive (82) | Ultra Matte Blue (81) | Ultra Matte White (79) | Ultra Matte Soft Pink (100)

NOTE: Colors available for both types of Bases, except for Polished Aluminum, available only for Swivel Base.

Cavaletti®

TECHNICAL DRAWINGS

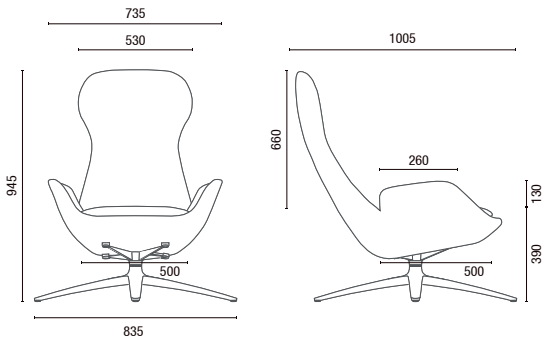

36.101 **Swivel Armchair - Polished Aluminum Base**

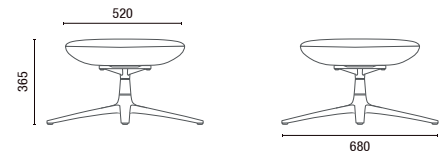

36.102 **Swivel Ottoman - Polished Aluminum Base**

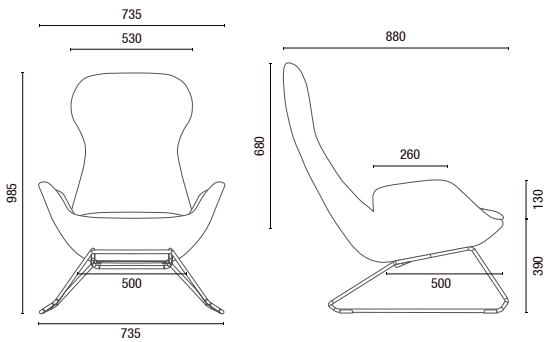

36.111 **Fixed Armchair - Steel Frame Base**

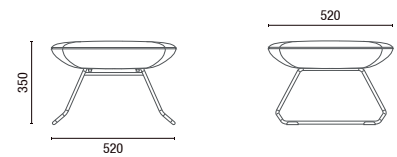

36.112 **Fixed Ottoman - Steel Frame Base**

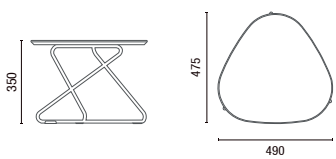

36.113 **Side Table - Steel Frame Base**

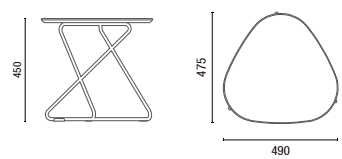

36.114 **Side Table - Steel Frame Base**

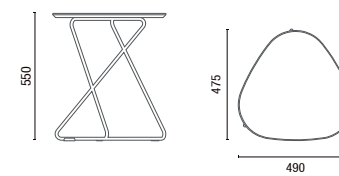

36.115 **Side Table - Steel Frame Base**

NOTE: Extreme measurements obtained without using a load gauge. To specify colors and finishes, always use original physical samples from Cavaletti.

Cavaletti®
PROFESSIONAL SEATING

Cavaletti S/A Professional Seating
Street Dr. Hiram Sampaio, 550
Erechim/RS Brasil 99.706-461
Fone/Fax: (54) 3520.4100
atendimento@cavaletti.com.br
www.cavaletti.com.br

6 YEARS of WARRANTY Cavaletti

ABNT-ISO9001 ABNT-ISO14001 ABNT-ISO45001 NR17

©Copyright 2021 Cavaletti S/A - All rights reserved. Cavaletti S/A reserves the right to change products at any time and without prior notice. Some items are optional and may not be part of the base product.JUN/2021 V2.

Cavaletti®

PROFESSIONAL SEATING

Cavaletti Duo

Cavaletti Duo

Cavaletti Duo is like that: a perfect item to compose the most diverse spaces, with the possibility of configuring finishes that make all the difference. For those who use it, a versatile chair, with simple lines and at the same time striking. For those who think about designing any space a multitude of combinations.

NOTE: Products in this image in Haven Terracotta 552; Haven Sand 560; Haven Land 561

CHARACTERISTICS

Minimalist except for options.

There are different options for fixed or swivel bases, capable of adapting perfectly to the use and style you imagine. You can configure the shell in single color or bicolor, or with wood and coating of your choice.

NOTE: Products in this image in CEC - Stilo Fendi 194; Caramel Leather 259; Haven Terracotta 552; Haven Field 556 and Haven Concrete 562; Liv Jade 511.

Customizable

At Cavaletti Duo, in addition to configuring the coverings and shell, on the disc-type bases and 4 rods it is still possible to customize the colors of the structure, according to the table in this catalog.

NOTE: Products in this image in Haven Sky 559 and Blue structure; Liv Jade 511 and Universal Black structure; Haven Orange 553 and Tile structure; Liv Limestone 515 and Ultra Matte White structure.

CONFIGURATIONS

36.071
Meeting Armchair
Swivel
Twin base with Casters
Fixed height option
Relax Option

36.072
Meeting Armchair
Swivel
Twin Base with Shoes
Fixed height option
Relax Option

36.172
Visitor Armchair
Swivel
4 Rod Base

36.074
Visitor Armchair
Swivel
Pyramidal Base

36.174
Visitor Armchair
Base Foot Stick

36.272
Visitor Armchair
Swivel
Disc Base

36.075 3L
Bench for 3 Seats

36.075 2L
Bench for 2 Seats

36.075
Bench

Bicolor Shell
Application of 02 colors
of the same coating

Wooden Shell
Shell application of
wood and coating

NOTE: Products in these images in Politex Gray Metal 402 and on the Cover of this catalog in Politex Cappuccino 403 and Sand structure; Haven Sand 560; Haven Terracotta 552, Caramel Leather 259; Liv Limestone 515.

COATINGS

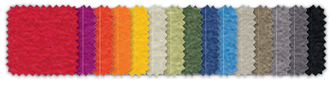

Haven
15 colors

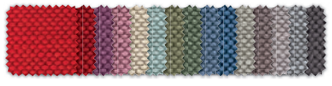

Liv
15 colors

Natural Leather
02 colors

CEC - Stilo
10 colors

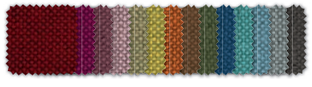

Grid
14 colors

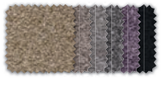

Politex
06 colors

STRUCTURES

Universal Black (101) · Ultra Matte Graphite (80) · Ultra Matte Red (85) · Ultra Matte Tile (84) · Ultra Matte Yellow (86) · Ultra Matte Blue (81) · Ultra Matte White (79) · Ultra Matte Sand (83) · Ultra Matte Olive (82) · Ultra Matte Soft Pink (100)

Cavaletti®

TECHNICAL DRAWINGS

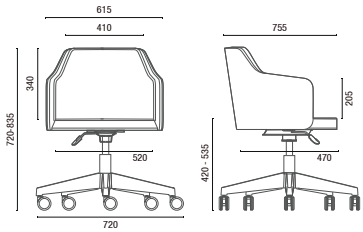

36.071 **Meeting Armchair**

Swivel
Twin base with Casters
Relax Option

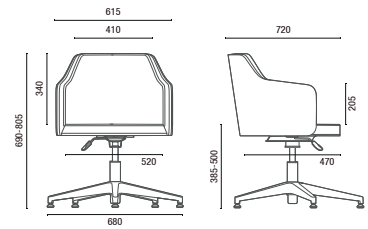

36.072 **Meeting Armchair**

Swivel
Twin Base with Glides
Relax Option

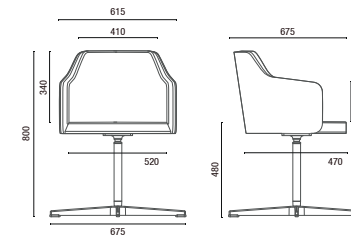

36.172 **Visitor Armchair**

Swivel
4 Rod Base

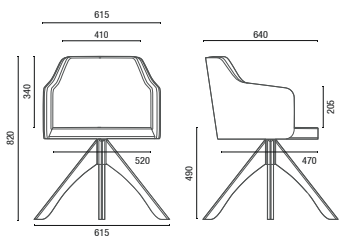

36.074 **Visitor Armchair**

Swivel
Pyramidal Base

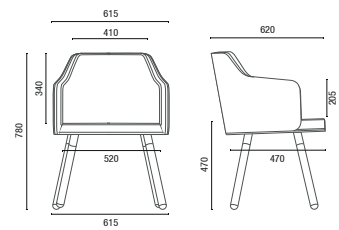

36.174 **Visitor Armchair**

Base Foot Stick

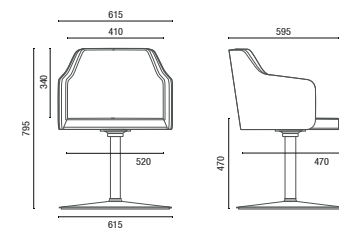

36.272 **Visitor Armchair**

Swivel
Disc Base

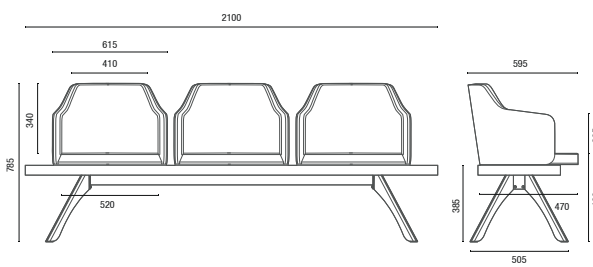

36.075 3L **Bench for 3 Seats**

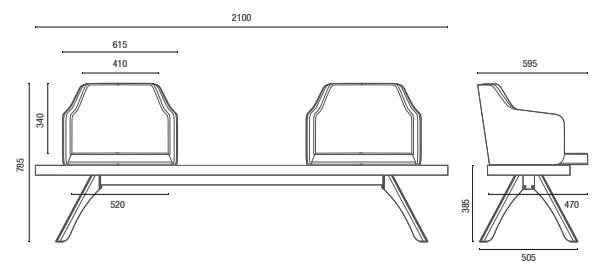

36.075 2L **Bench for 2 Seats**

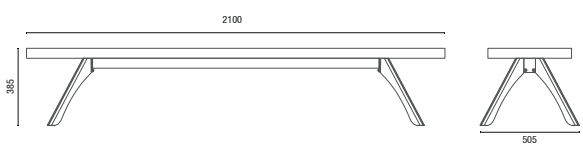

36.075 **Bench**

NOTE: Extreme measurements obtained without using a load gauge.

©Copyright 2021 Cavaletti S/A - All rights reserved. Cavaletti S/A reserves the right to change products at any time and without prior notice. Some items are optional and may not be part of the base product.JUN/2021 V2.

Cavaletti®
PROFESSIONAL SEATING

Cavaletti S/A Professional Seating
Street Dr. Hiram Sampaio, 550
Erechim/RS Brasil 99.706-461
Fone/Fax: (54) 3520.4100
atendimento@cavaletti.com.br
www.cavaletti.com.br

Quality warranty referring to manufacturing defects in the warranty document
WARRANTY Cavaletti

ABNT-ISO9001 ABNT-ISO14001 ABNT-ISO45001 NR17

Cavaletti®

PROFESSIONAL SEATING

Cavaletti Stretch

Cavaletti Stretch

Cavaletti Stretch is a product with an authorial design, designed to transform moments of decompression into inspiration, with the union of materials such as steel, wood and noble coatings in the same piece. The chair, with a lower seat, provides a healthy change of posture throughout the day. Its use can be combined with accessories such as a side table and footrest, creating stylish and ergonomic environments.

NOTE: Products in this image with coating in Haven Savannah, Sky 559 and Terracotta 552.

CHARACTERISTICS

Comfort that inspires

The armchair, with a lower and generous seat, is a invitation to change posture in moments of pause and decompression, recovering energy and increasing productivity.

NOTE: Products in this image coated in Haven Twilight 558 and Orange 553.

Customizable

There are 10 color options for the structure and over 50 color options for coatings (Liv, Haven, Grid, CEC - Stilo and Natural Leather).

Strength and Durability

Armchair structure and accessories built 100% in steel and welded, eliminating the need for screws.

NOTE: Products in this image with coating in Haven Sky 559, Red 550, Savannah 557 and Orange 553.

COMPOSITIONS

Bases

You choose the base of the chair according to the personality of the environment. Fixed model with footrest for static and ski use for dynamic use in more informal environments.

36.906
Fixed Armchair
4 feet base with natural wood tips

36.906
Ski Armchair
Ski base in varnished Tauari laminated wood.

Accessories

The side table can be used as a support or to accommodate decorative objects. Ottoman, on the other hand, is an invitation to stretch the legs, making the environment even more welcoming, being its use recommended with the Fixed Base Armchair.

36.914
Ottoman
Footrest
Natural wood tips

36.901
Side Table
Top in Tauari varnished
Natural wood tips

NOTE: Products in these images with coatings in Natural Leather Caramel 259 and on the cover of this catalog in Haven Sky 559.
The colors and coatings shown in this catalog are illustrative, and should be used for reference only. For more information, see the sample.

Cavaletti®

TECHNICAL DRAWINGS

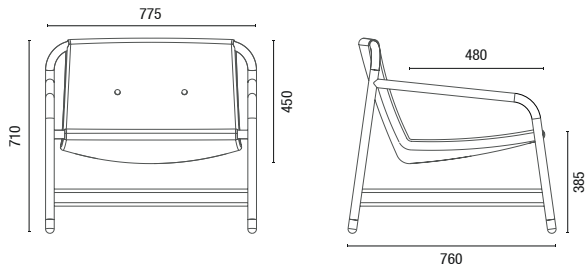

36.906 **Fixed Base Armchair**

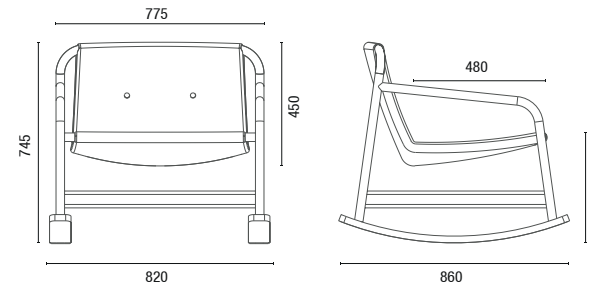

36.906 **Ski Base Armchair**

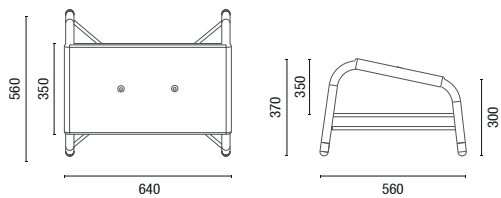

36.914 **Ottoman**

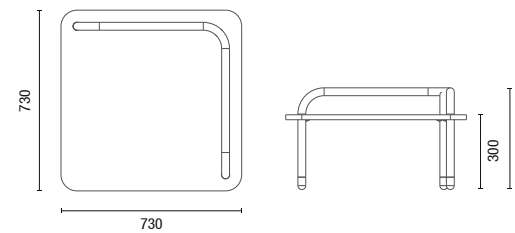

36.901 **Side Table**

NOTE: Extreme measurements obtained without using a load gauge.

STRUCTURES

- Universal Black (101)
- Ultra Matte Graphite (80)
- Ultra Matte Red (85)
- Ultra Matte Tile (84)
- Ultra Matte Yellow (86)
- Ultra Matte Sand (83)
- Ultra Matte Olive (82)
- Ultra Matte Blue (81)
- Ultra Matte White (79)
- Ultra Matte Soft Pink (100)

COATINGS

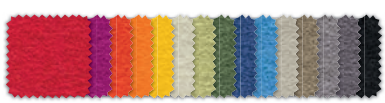

Haven
15 colors

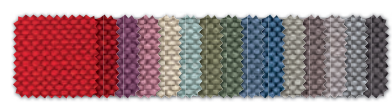

Liv
15 colors

Natural Leather
02 colors

CEC - Stilo
10 colors

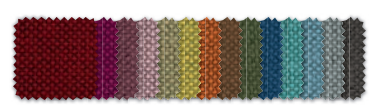

Grid
14 colors

©Copyright 2021 Cavaletti S/A - All rights reserved. Cavaletti S/A reserves the right to change products at any time and without prior notice. Some items are optional and may not be part of the base product.JUN/2021 V2.

Cavaletti®
PROFESSIONAL SEATING

Cavaletti S/A Professional Seating
Street Dr. Hiram Sampaio, 550
Erechim/RS Brasil 99.706-461
Fone/Fax: (54) 3520.4100
atendimento@cavaletti.com.br
www.cavaletti.com.br

6 YEARS of WARRANTY Cavaletti

ABNT-ISO9001 ABNT-ISO14001 ABNT-ISO45001 NR17

Cavaletti®

PROFESSIONAL SEATING

Cavaletti Fun

Cavaletti Fun

The Fun line is aimed at informal environments, in which light furniture and basic lines help to create pleasant spaces for socializing and relaxation. There are a variety of models, all available in colors to create a happy or relaxing atmosphere.

14020
Lounge Stool
Seat in Wood with Varnish

14020
Lounge Stool
Upholstered Seat

Products in this image: Lounge Stool in varnished wood with Tile structure (84) and Lounge Stool upholstered in CEC-Stilo Green (315) with Olive structure (82).

STRUCTURES

Chrome (05) | Universal Black (101) | Semi Matte Silver (13) | Bright Gray (12) | Ultra Matte Graphite (80) | Ultra Matte White (79) | Ultra Matte Red (85) | Ultra Matte Tile (84) | Ultra Matte Yellow (86) | Ultra Matte Sand (83) | Ultra Matte Olive (82) | Ultra Matte Blue (81) | Ultra Matte Soft Pink (100)

Products in the ambience image: Lounge Stools in varnished wood with Tile structure (84) and CEC-Stilo Green (315) with Olive structure (82). Puffs in Liv Jasper (507), Liv Rose Quartz (509), Liv Sandstone (500), Liv Turquoise (502), Liv Oil (505), Liv Carbon (504), Haven Red (550), Haven Sky (559), Haven Snow (555), Haven Orange (553), Haven Earth (561) and Haven Asphalt (563). Spin in Haven Concrete (562). Stretch in CEC-Stilo Blue (314) with Blue structure (81). Spin Table 36803 Sand structure (83).

CONFIGURATIONS

14015
High Lounge Stool
With Backrest
*Optional with 50cm

14015
High Lounge Stool
*Optional with 50cm

PUFF
Irregular Hexagonal
36.350 - Low Size 350mm
36.445 - Medium Size 450mm
36.475 - High Size 750mm

14016
Lounge Stool
With Backrest

14016
Lounge Stool
Without Backrest

PUFF
Regular Hexagonal
36.635 - Low Size 350mm
36.645 - Medium Size 450mm
36.675 - High Size 750mm

36016
Swivel Bench
Base in Aluminum

746
Magazine Rack

747
Magazine Rack

PUFF
Quadrate
36.030 - 450mm

Products on this page: Lounge Stools in CEC-Stilo Blue (314) with Blue structure (81), CEC-Stilo Green (315) with White structure (79), CEC-Stilo Fendi (194) with Sand structure (83), CEC-Stilo Gray (175) with Universal Black structure (101) and CEC-Stilo Wine (233) with base in Aluminum. Magazine racks in Red (85) and Gray (12). Puffs in Haven Sand (560), Haven Savanna (557), Haven Earth (561), Liv Nickel (514), Liv Rose Quartz (509), Liv Turquoise (502) and Liv Sapphire (512).

TECHNICAL DRAWINGS

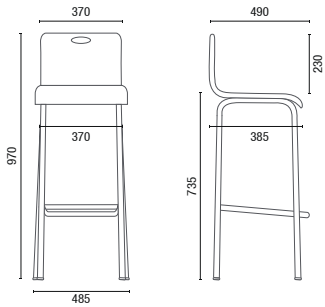

14020 **Wooden Lounge Stool**

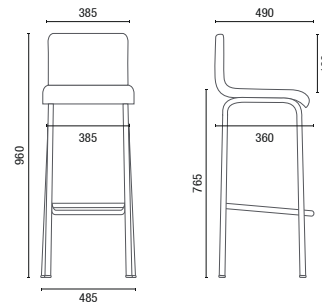

14020 **Upholstered Lounge Stool**

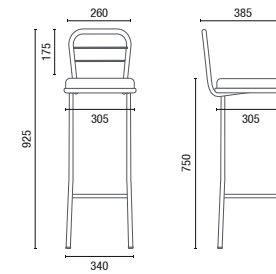

14015 **High Lounge Stool with Backrest**

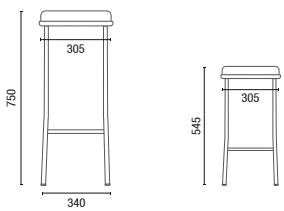

14015 **Hight/Low Lounge Stool**

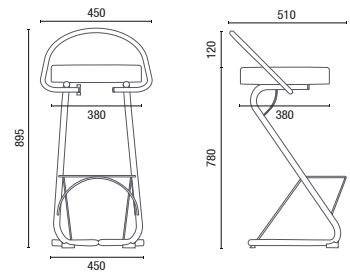

14016 **Lounge Stool with Backrest**

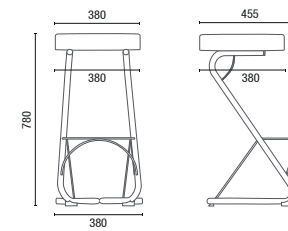

14016 **Lounge Stool**

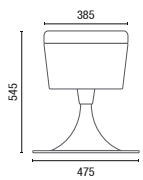

36016 **Swivel Bench**

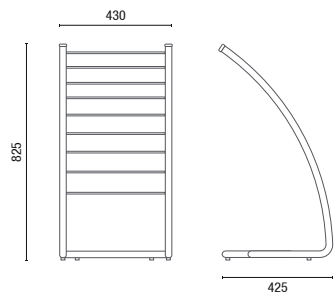

746 **Magazine Rack**

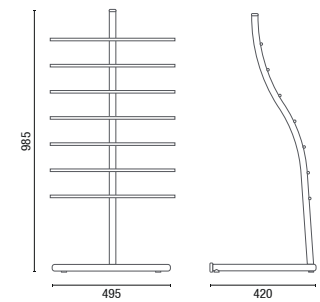

747 **Magazine Rack**

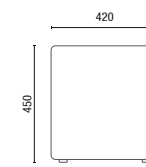

36030 **Puff**

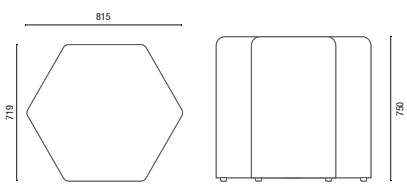

36675 **Regular Hexagonal - High Size 750mm**

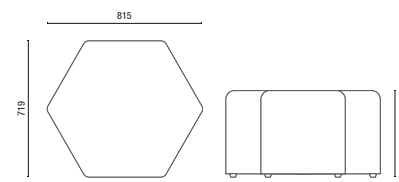

36645 **Regular Hexagonal - Medium Size 450mm**

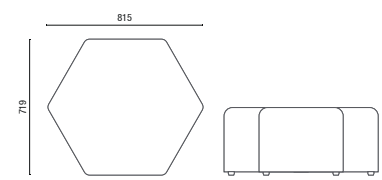

36635 **Regular Hexagonal - Low Size 350mm**

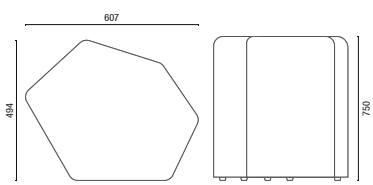

36475 **Irregular Hexagonal - High Size 750mm**

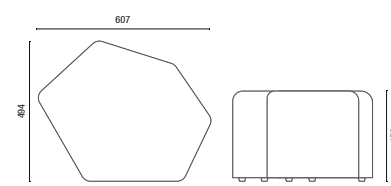

36445 **Irregular Hexagonal - Medium Size 450mm**

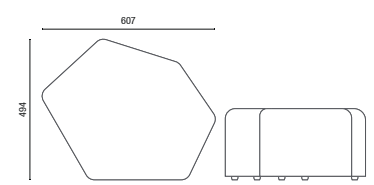

36350 **Irregular Hexagonal - Low Size 350mm**

NOTE: Extreme measurements obtained without using a load gauge.

Cavaletti®
PROFESSIONAL SEATING

Cavaletti S/A Professional Seating
Street Dr. Hiram Sampaio, 550
Erechim/RS Brasil 99.706-461
Fone/Fax: (54) 3520.4100
atendimento@cavaletti.com.br
www.cavaletti.com.br

Cavaletti warranty referring to manufacturing defect (see service guide in the warranty document) WARRANTY Cavaletti

ABNT-ISO9001 ABNT-ISO14001 ABNT-ISO45001 NR17

©Copyright 2021 Cavaletti S/A - All rights reserved. Cavaletti S/A reserves the right to change products at any time and without prior notice. Some items are optional and may not be part of the base product.JUN/2021 V2.

Cavaletti
PROFESSIONAL SEATING
Cavaletti Spin

Cavaletti Spin

The Spin sofa system provides flexible configurations for the most different arrangements of collaborative spaces. They are linear, curved modules, puffs and accessories that make collective environments more productive and versatile.

Lounge Layout

Waiting Layout

Meeting Layout

HUB Layout

CHARACTERISTICS

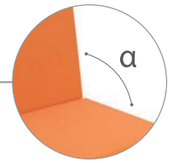

ERGONOMICS
Angles and level of cushioning designed to boost productivity.

CONNECTIVITY
Option of built-in USB sockets integrated into the product design.

COMPLEMENTS
Exclusive sideboards and stools that expand the combination possibilities.

Forum Layout

NOTE: Chalkboard, sideboards, flower boxes and vases are for illustration purposes only.

CONFIGURATIONS

36.812
High-Back Set 1200mm
Optional USB Connection

36.813
Straight Module 1300mm
Optional USB Connection

36.865
Straight Module 650mm
Optional USB Connection.

36.805
Table Module
Wood Top
Optional USB Connection

36.845 IN
45º Internal Backrest Curved Module

36.890 IN
90º Internal Backrest Curved Module
Optional USB Connection

36.818
180º Internal Backrest Tip Module
Optional USB Connection

36.845 EX
45º External Backrest Curved Module

36.890 EX
90º External Backrest Curved Module
Optional USB Connection

38030 PUFF
Round Puff with Leather Strap

38035 PUFF
Round Puff Ginga (Balance)

36.814
Spin Stool 700mm

36.802
Spin Stool 450mm

36.801
Spin Sideboard

36.803
Spin Sidetable

36.805 ROUND
Round Table 1200mm

36.805 SQUARE
Square Table 750mm x 750mm

11.801 4L
Rectangular Table
Optional USB/Electrical Connection

Cavaletti®

TECHNICAL DRAWINGS

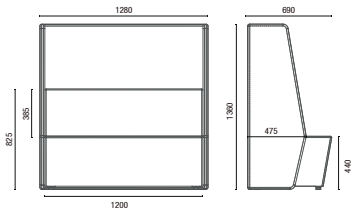

36.812
High-Back Set 1200mm

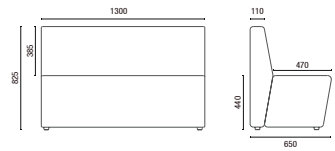

36.813
Straight Module 1300mm

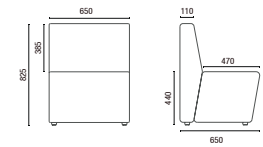

36.865
Straight Module 650mm

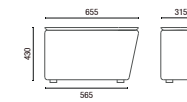

36.805
Table Module

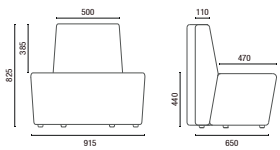

36.845 IN
45º Internal Backrest Curved Module

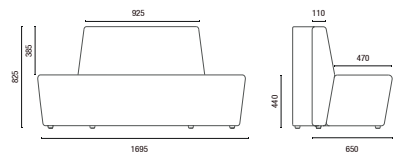

36.890 IN
90º Internal Backrest Curved Module

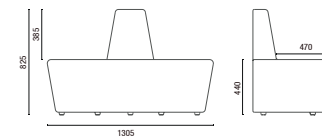

36.818
180º Internal Backrest Tip Module

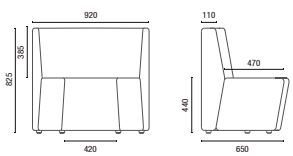

36.845 EX
45º External Backrest Curved Module

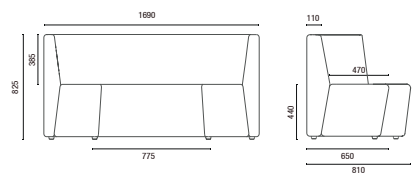

36.890 EX
90º External Backrest Curved Module

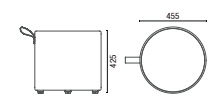

38030 PUFF
Round Puff with Leather Strap

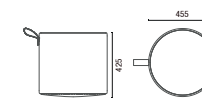

38035 PUFF
Round Puff Ginga (Balance)

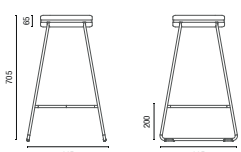

36.814 **Spin Stool 700mm**

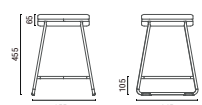

36.802 **Spin Stool 450mm**

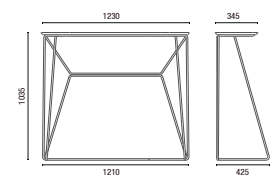

36.801 **Spin Sideboard**

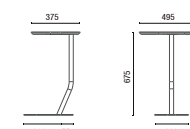

36.803 **Spin Sidetable**

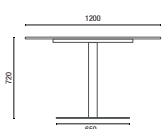

36.805 ROUND
Round Table 1200mm

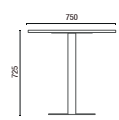

36.805 SQUARE
Square Table 750mm x 750mm

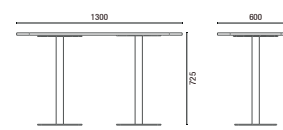

11.801 4L **Rectangular Table**

NOTE: Extreme measurements obtained without using a load gauge.

Cavaletti®
PROFESSIONAL SEATING

Cavaletti S/A Professional Seating
Street Dr. Hiram Sampaio, 550
Erechim/RS Brasil 99.706-461
Fone/Fax: (54) 3520.4100
atendimento@cavaletti.com.br
www.cavaletti.com.br

WARRANTY Cavaletti

ABNT-ISO9001 ABNT-ISO14001 ABNT-ISO45001 NR17

©Copyright 2021 Cavaletti S/A - All rights reserved. Cavaletti S/A reserves the right to change products at any time and without prior notice. Some items are optional and may not be part of the base product.JUN/2021 V2.

Cavaletti®

PROFESSIONAL SEATING

Cavaletti Talk

Cavaletti Talk

Collaboration is the contemporary trend in the labor market.The Cavaletti Talk line was designed for increase productivity by stimulating meetings and quick, informal conversations. In addition to the basic versions without back or with low back, see the option high-back, which creates a rally point inside the office or lounge, optimizing the installation, generating space savings (diagram on the side) and facilitating future layout changes.

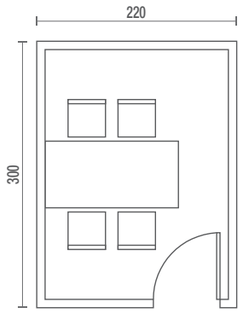

Traditional Meeting Room
6.60 m²

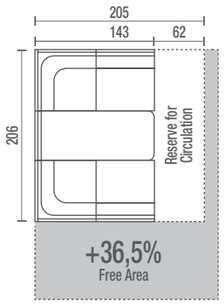

Talk Meeting Point
3m² + 1.25m² (circulation area)

CONFIGURATIONS

36505
Armchair
Double Arm and Backrest

36505
Corner Sofa
Arm and Backrest

36505
Central Sofa
Backrest

36505
Bench

36.555
HB Double

36.575
HB Face-to-Face
Internal Table
Electrified Box (Optional)

36.565
HB Meeting
Internal Table
Electrified Box (Optional)

11.801
Talk Side Table

Cavaletti®

TECHNICAL DRAWINGS

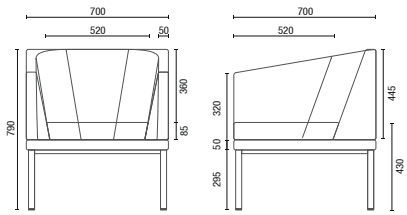

36.505 **Armchair**

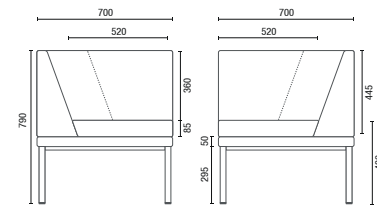

36.505 **Corner Sofa**

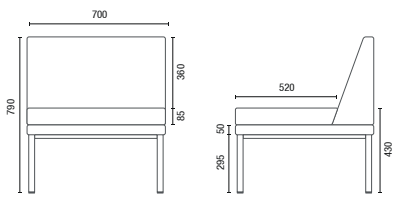

36505 **Central Sofa**

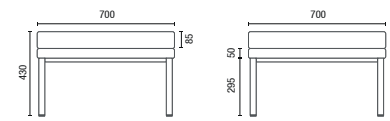

36505 **Bench**

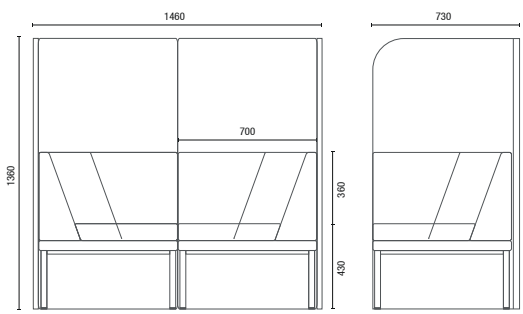

36.555 **HB Double**

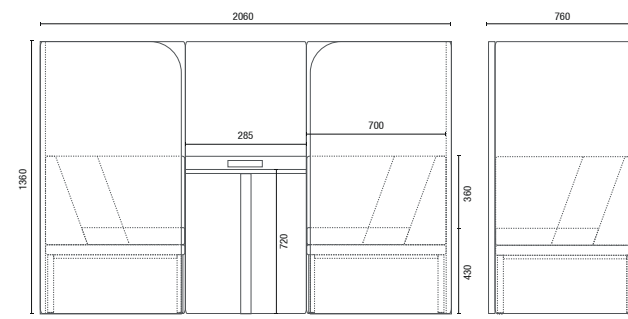

36.575 **HB Face-to-Face**

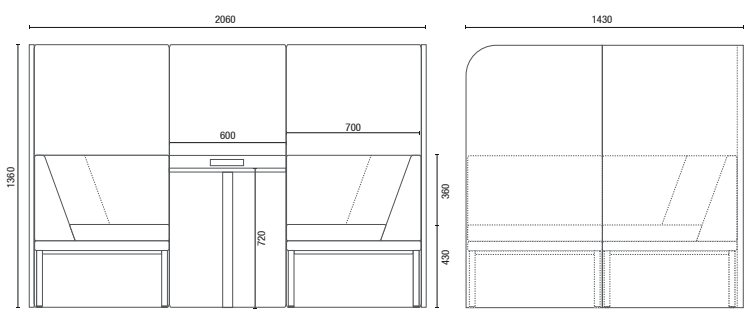

36.565 **HB Meeting**

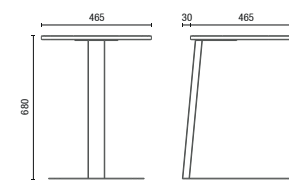

11.801 **Talk Side Table**

NOTE: Extreme measurements obtained without using a load gauge.

Cavaletti S/A Professional Seating
Street Dr. Hiram Sampaio, 550
Erechim/RS Brasil 99.706-461
Fone/Fax: (54) 3520.4100
atendimento@cavaletti.com.br
www.cavaletti.com.br

©Copyright 2021 Cavaletti S/A - All rights reserved. Cavaletti S/A reserves the right to change products at any time and without prior notice. Some items are optional and may not be part of the base product.JUN/2021 V2.

Cavaletti®

PROFESSIONAL SEATING

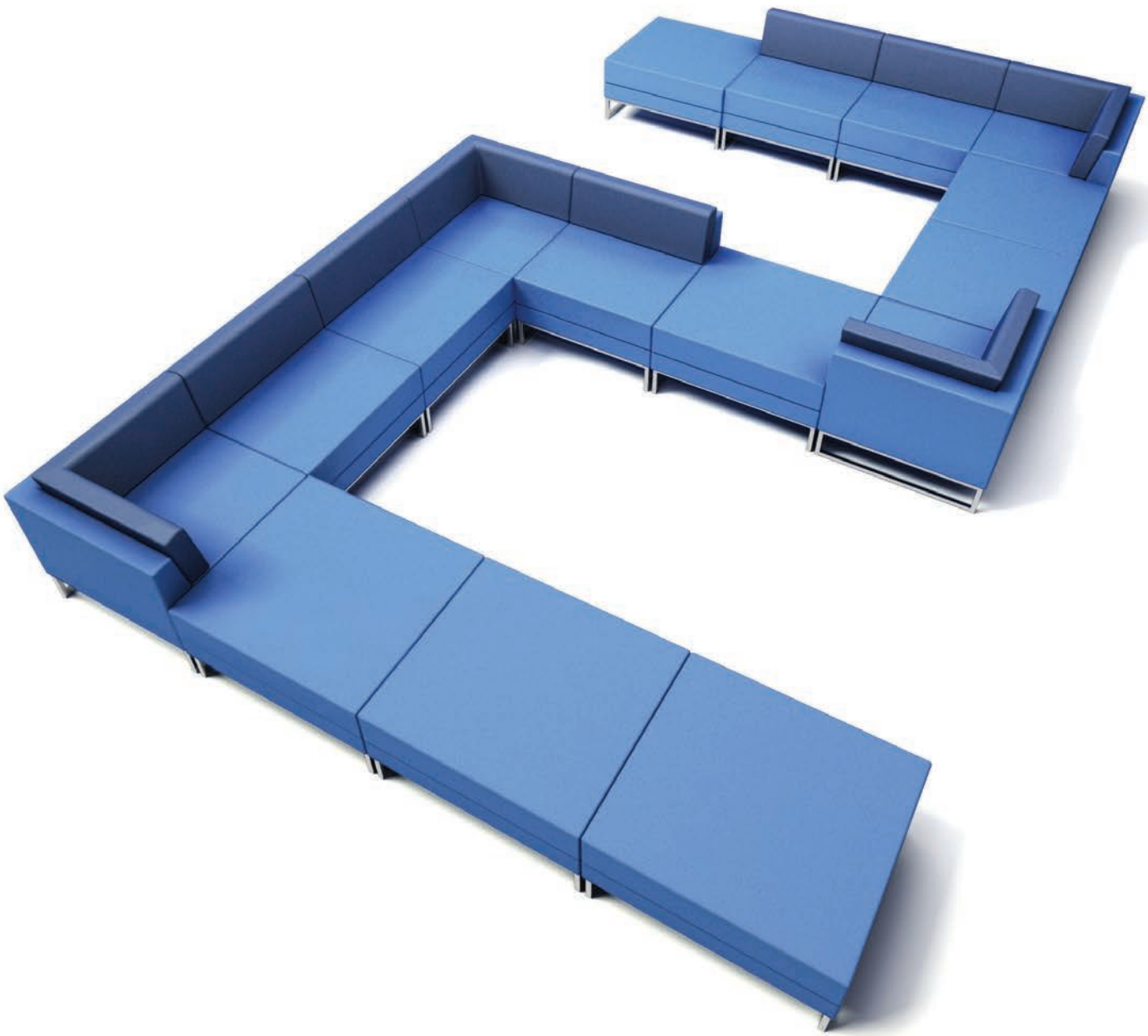

Cavaletti Connect

Cavaletti Connect

The Connect upholstery line features a universal design, with simple and practical construction, bringing comfort so smart for lounge spaces and general seating. Your modules allow different mounting arrangements, offering dynamism and beauty to the environments.

CONFIGURATIONS

36205
Armchair
Double Arm and Backrest

36205
Corner Armchair
Arm and backrest

36205
Central Armchair
Backrest

36205
Bench

TECHNICAL DRAWINGS

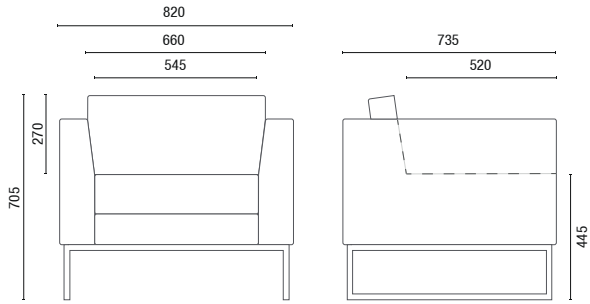

36205 **Armchair**

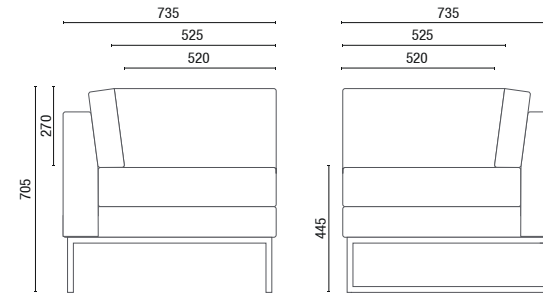

36205 **Corner Armchair**

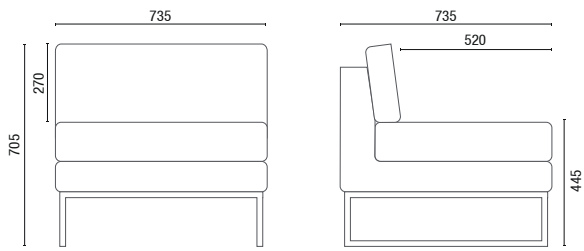

36205 **Central Armchair**

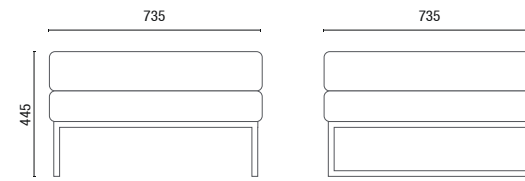

36205 **Bench**

NOTE: Extreme measurements obtained without using a load gauge.

Cavaletti S/A Professional Seating
Street Dr. Hiram Sampaio, 550
Erechim/RS Brasil 99.706-461
Fone/Fax: (54) 3520.4100
atendimento@cavaletti.com.br
www.cavaletti.com.br

R4DESIGN

©Copyright 2021 Cavaletti S/A - All rights reserved. Cavaletti S/A reserves the right to change products at any time and without prior notice. Some items are optional and may not be part of the base product.JUN/2021 V2.

Cavaletti®

PROFESSIONAL SEATING

Cavaletti Spot

Cavaletti Spot

Aimed at waiting areas, lounges and collective spaces, the Spot line models stand out for the uniqueness of their design, and can be used in both commercial and residential environments.

36060
Lounge Chair
Swivel
4 Rod Base
Wooden Shell with Upholstery

COATINGS

Several coating options: CEC-Stilo, Natural Leather, Grid, Haven, Liv, Blend, Polyester, Politex, Space and Vinyl.

BASES AND STRUCTURES

Fixed or Swivel base options depending on the model. Chrome Finish (Steel bases), Polished (Aluminum bases) or Epoxy Painting (with 12 color options).

CONFIGURATIONS

36010
Lounge Chair
Swivel
Aluminum Disc Base

36010
Lounge Chair
Fixed or Swivel
4 Feet Base

36040
Lounge Chair
Arch Structure

36050
Lounge Chair
Fixed or Swivel

36060
Lounge Chair
Swivel
4 Rod Base
Upholstered Shell

STRUCTURES

Chrome (05) | Universal Black (101) | Semi Matte Silver (13) | Bright Gray (12) | Ultra Matte Graphite (80) | Ultra Matte White (79) | Ultra Matte Red (85) | Ultra Matte Tile (84) | Ultra Matte Yellow (86) | Ultra Matte Sand (83) | Ultra Matte Olive (82) | Ultra Matte Blue (81) | Ultra Matte Soft Pink (100)

TECHNICAL DRAWINGS

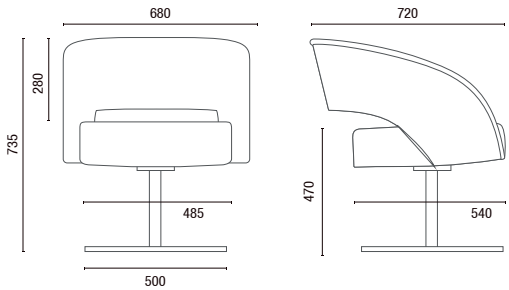

36010 **Lounge Chair Disc Base**

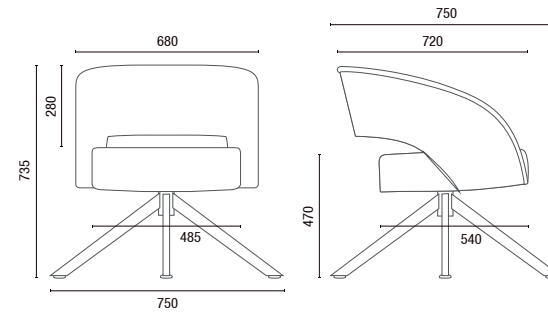

36010 **Lounge Chair Base 4 Feet**

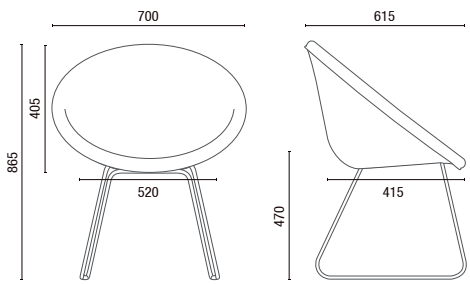

36040 **Lounge Chair**

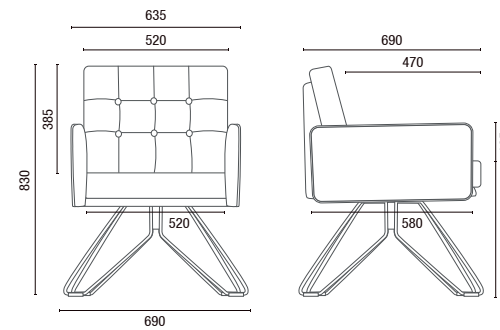

36050 **Lounge Chair**

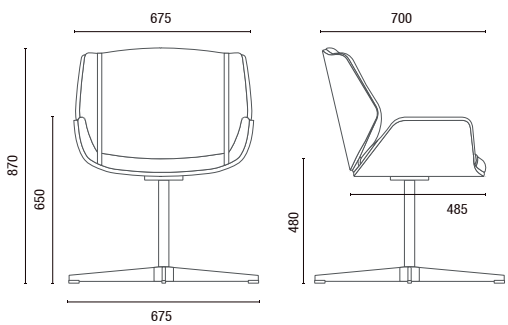

36060 **Lounge Chair**

NOTE: Extreme measurements obtained without using a load gauge.

©Copyright 2021 Cavaletti S/A - All rights reserved. Cavaletti S/A reserves the right to change products at any time and without prior notice. Some items are optional and may not be part of the base product.JUN/2021 V2.

Cavaletti®
PROFESSIONAL SEATING

Cavaletti S/A Professional Seating
Street Dr. Hiram Sampaio, 550
Erechim/RS Brasil 99.706-461
Fone/Fax: (54) 3520.4100
atendimento@cavaletti.com.br
www.cavaletti.com.br

6 YEARS of WARRANTY Cavaletti

ABNT-ISO9001 ABNT-ISO14001 ABNT-ISO45001 NR17

Cavaletti®

PROFESSIONAL SEATING

Cavaletti Box

Cavaletti Box

Created for reception and waiting environments, the Box line provides comfort in the ideal measure. Upholstery is easily combined and its compact dimensions optimize the use of space.

36020
Visitor Armchair
Fixed or Swivel
4 Feet Base

CONFIGURATIONS

36105
Reception Armchair
1 Seat

36105
Reception Sofa
2 Seats

36105
Reception Sofa
3 Seats

12004
Reception Armchair
1 Seat

12004
Reception Sofa
2 Seats

12004
Reception Sofa
3 Seats

12205
Reception Armchair
1 Seat

12205
Reception Armchair
2 Seats

12205
Reception Armchair
3 Seats

12105
Reception Armchair
1 Seat

12105
Reception Armchair
2 Seats

12105
Reception Armchair
3 Seats

Cavaletti®

TECHNICAL DRAWINGS

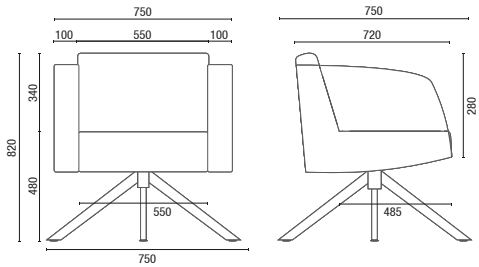

36020 **Visitor Armchair**

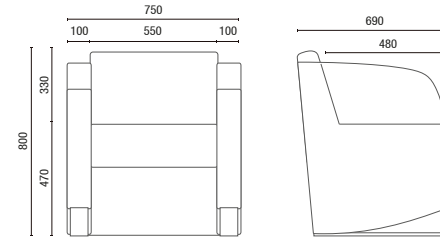

36105 **Reception Sofa**
Width:
1 Seat – 750mm
2 Seats – 1280mm
3 Seats – 1820mm

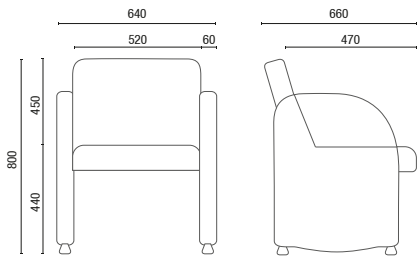

12004 **Reception Sofa**
Width:
1 Seat – 640mm
2 Seats – 1170mm
3 Seats – 1700mm

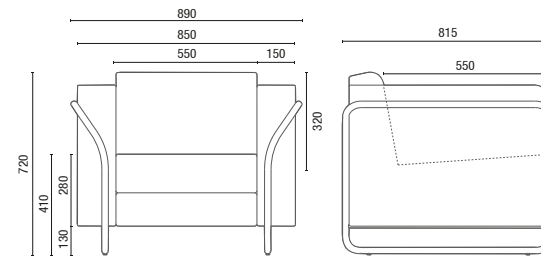

12205 **Reception Sofa**
Width:
1 Seat – 890mm
2 Seats – 1350mm
3 Seats – 1850mm

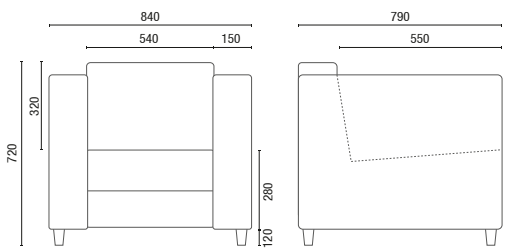

12105 **Reception Sofa**
Width:
1 Seat – 840mm
2 Seats – 1300mm
3 Seats – 1800mm

NOTE: Extreme measurements obtained without using a load gauge.

©Copyright 2021 Cavaletti S/A - All rights reserved. Cavaletti S/A reserves the right to change products at any time and without prior notice. Some items are optional and may not be part of the base product.JUN/2021 V2.

Cavaletti®
PROFESSIONAL SEATING

Cavaletti S/A Professional Seating
Street Dr. Hiram Sampaio, 550
Erechim/RS Brasil 99.706-461
Fone/Fax: (54) 3520.4100
atendimento@cavaletti.com.br
www.cavaletti.com.br

1 Year of Cavaletti warranty referred to manufacturing defects in the material composition. 1YEAR of WARRANTY Cavaletti

ABNT-ISO9001 ABNT-ISO14001 ABNT-ISO45001 NR17

Cavaletti®

PROFESSIONAL SEATING

Cavaletti Coletiva

Cavaletti Coletiva

Designed to serve a wide variety of architectures and types of events, the Coletiva line stands out for its solid construction which aims at greater durability. With options for finishes and accessories, Coletiva products guarantee optimal levels of usability throughout their entire useful life.

CONFIGURATIONS

Two backrest heights available:
Director and President.

Backrest protection
fairing option.

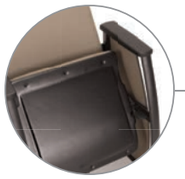

Retractable seat with fairing
option.

12020
Auditorium
Double Arms

Double or Intercalated Arms
with PU Armrest.

Side covered in fabric or finished in
Wood with two color options.

Retractable Clipboard Option.

1001
Stackable
Maximum stacking: 10 units

1002
Stackable
Maximum stacking: 10 units

Removable Clipboard
Optional for 1001 and 1002

1003
Stackable
Maximum stacking: 05 units

35013
Stackable
Integrated Arms
Maximum stacking: 05 units

1100
Trolley for Transport
Available for models
1001, 1002, 1003 and 35013

12018
Auditorium
Intercalated or Double Arms

12011
Auditorium
Intercalated or Double Arms

Retractable Clipboard
Optional for 12011

12030
Auditorium
Intercalated or Double Arms

Cavaletti®

TECHNICAL DRAWINGS

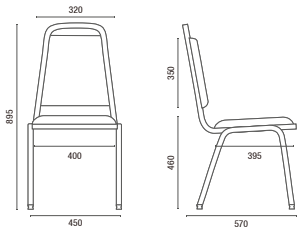

1001 **Stackable**

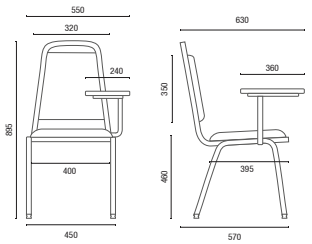

1001 U **Stackable with Clipboard**

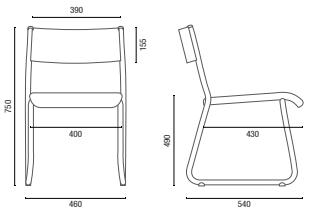

1003 **Stackable**

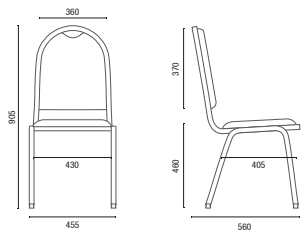

1002 **Stackable**

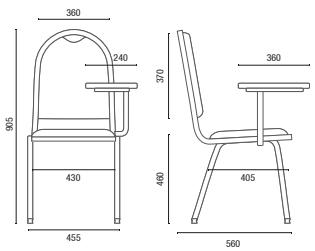

1002 U **Stackable with Clipboard**

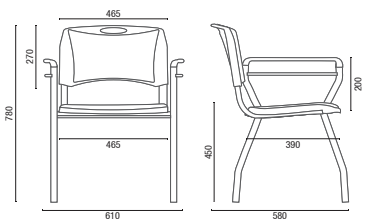

35013 **Stackable**

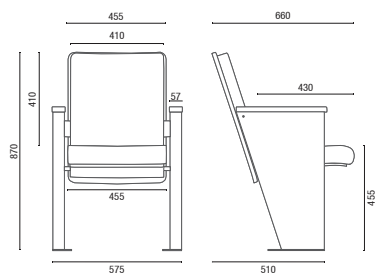

12006 **Auditorium**

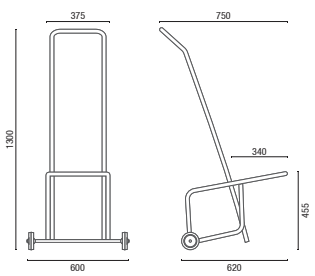

1100 **Trolley for Transport**

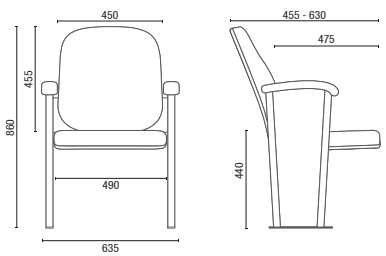

12011 **Auditorium**

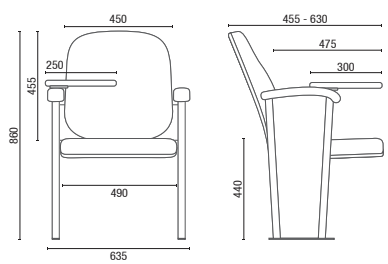

12011 UE **Auditorium with Clipboard**

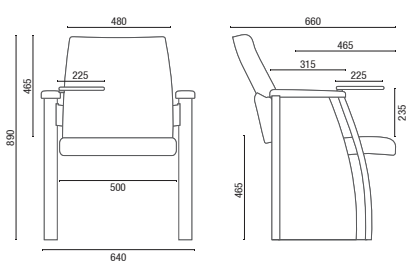

12020 UE **Auditorium with Clipboard**

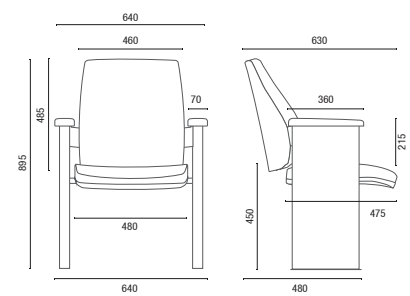

12030 **Auditorium**

©Copyright 2021 Cavaletti S/A - All rights reserved. Cavaletti S/A reserves the right to change products at any time and without prior notice. Some items are optional and may not be part of the base product.JUN/2021 V2.

Cavaletti®
PROFESSIONAL SEATING

Cavaletti S/A Professional Seating
Street Dr. Hiram Sampaio, 550
Erechim/RS Brasil 99.706-461
Fone/Fax: (54) 3520.4100
atendimento@cavaletti.com.br
www.cavaletti.com.br

6 YEARS of WARRANTY Cavaletti

ABNT-ISO9001 ABNT-ISO14001 ABNT-ISO45001 NR17